ADBS-A350

Optical Finger Navigation

Data Sheet

Lead (Pb) Free
RoHS 6 fully
compliant

Description

The ADBS-A350 sensor is a small form factor (SFF) LED illuminated optical finger navigation system. It is a low-power optical finger navigation sensor with low-power architecture and automatic power management modes, making it ideal for battery-and power-sensitive applications such as mobile phones.

The ADBS-A350 is capable of high-speed motion detection – up to 20 ips. In addition, it has an on-chip oscillator and integrated LED to minimize external components.

There are no moving parts, thus provide high reliability and less maintenance for the end user. In addition, precision optical alignment is not required, facilitating high volume assembly.

The sensor is programmed via registers through either a serial peripheral interface or a two wire interface port. It is packaged in a 28 I/O surface mountable package.

The ADBS-A350 is designed for use with ADBL-A321 lens.

The ADBL-A321 lens is the optical component necessary for proper operation of the sensor.

Theory of Operation

The ADBS-A350 is based on Optical Finger Navigation (OFN) Technology, which measures changes in position by optically acquiring sequential surface images (frames) and mathematically determining the direction and magnitude of movement.

The ADBS-A350 contains an Image Acquisition System (IAS), a Digital Signal Processor (DSP), and a communication system.

The IAS acquires microscopic surface images via the lens and illumination system. These images are processed by the DSP to determine the direction and distance of motion. The DSP calculates the Δx and Δy relative displacement values.

The host reads the Δx and Δy information from the sensor serial port if a motion interrupt is published. The microcontroller then translates the data into cursor navigation, rocker switch, scrolling or other system dependent navigation data.

Features

- Low power architecture
- Surface mount technology (SMT) device
- Self-adjusting power-saving modes for longer battery life
- High speed motion detection up to 20 ips
- Self-adjusting frame rate for optimum performance
- Motion detect interrupt
- Finger detect interrupt
- Soft click and Tap detect interrupt
- Single Interrupt pin
- Optional PWM output for LED illumination
- Optional switch input for center click function
- Internal oscillator – no clock input needed
- Selectable 125, 250, 500, 750, 1000 and 1250 cpi resolution
- Single 1.8 V supply voltage for analog and digital
- Internal power up reset (POR)
- Selectable Input/Output voltage at 1.8 V or 2.8 V nominal
- 4-wire Serial peripheral interface (SPI) or Two-wire interface (TWI)
- Integrated chip-on-board LED with wavelength of 870 nm

Applications

- Finger input devices
- Mobile devices
- Integrated input devices
- Battery-powered input device

Avago customers purchasing the ADBS-350 OFN product are eligible to receive a royalty free license to our US patents 6977645, 6621483, 6950094, 6172354 and 7289649, for use in their end products.

CAUTION: *It is advised that normal static precautions be taken in handling and assembly of this component to prevent damage and/or degradation which may be induced by ESD.*

Pinout of ADBS-A350 Optical Sensor

Pin	Name	Description	Input/Output pin	Function
1	GND	Ground		
2	XY_LED	XY LED driver connection		Must connect to LED- (see schematics Figure 7a, 7b)
3	EVENT_INT	Event Interrupt (active low output)	O (CMOS output)	Open when not used Default active low signal, can be changed in Event control register 0x1d
4	GPIO	General Purpose Input/ Output	I (Schmitt trigger input)/ O (CMOS output)	Pin can be used for FPD output, PWM output or Dome/ Button click input. If configure as input do not leave pin unconnected
5	VDDIO	Voltage supply for Input/ Output pins		Supply 1.8 V or 2.8 V
6	IO_MOSI_A0	TWI address set or Master Out Slave In	I (Schmitt trigger input)	SPI : MOSI (Master Out Slave In) signal TWI Address Select, A0 Do no leave pin unconnected
7	IO_CLK	Serial clock input	I (Schmitt trigger input)	Serial clock signal
8	IO_MISO_SDA	TWI serial data or Master In Slave Out	In SPI – CMOS output. In TWI – open drain I/O	SPI : MISO (Master Input Slave Out) signal TWI : serial data signal
9	IO_NCS_A1	TWI address set or Chip Select	I (Schmitt trigger input)	SPI : NCS (chip select) active low signal TWI Address Select, A1 Do no leave pin unconnected
10	NRST	Hardware Chip Reset	I (Schmitt trigger input)	Set to high when not used Active low signal
11	GND	Ground		
12	NC	No Connect		No connection
13	SHTDWN	Shutdown (active high input)	I (Schmitt trigger input)	Set to low when not used Active high signal
14	VDDIO	Voltage supply for I/O		Sets I/O voltage
15	IO_SELECT	SPI / TWI Select	I (Schmitt trigger input)	TWI : GND or SPI : High
16	NC	No Connect		No connection
17	NC	No Connect		No connection
18	NC	No Connect		No connection
19	NC	No Connect		No connection
20	VDD	Voltage supply		Supply 1.8 V
21	GND	Ground		
22	GND	Ground		
23	NC	No Connect		No connection
24	LED-	LED Cathode		Must connect to XY_LED
25	LED-	LED Cathode		Must connect to XY_LED
26	LED-	LED Cathode		Must connect to XY_LED
27	LED+	LED Anode		Provide 1.8 V supply voltage
28	GND	Ground		

Note:
1. NC pins can be tied to VDD, GND or left open/ unconnected.

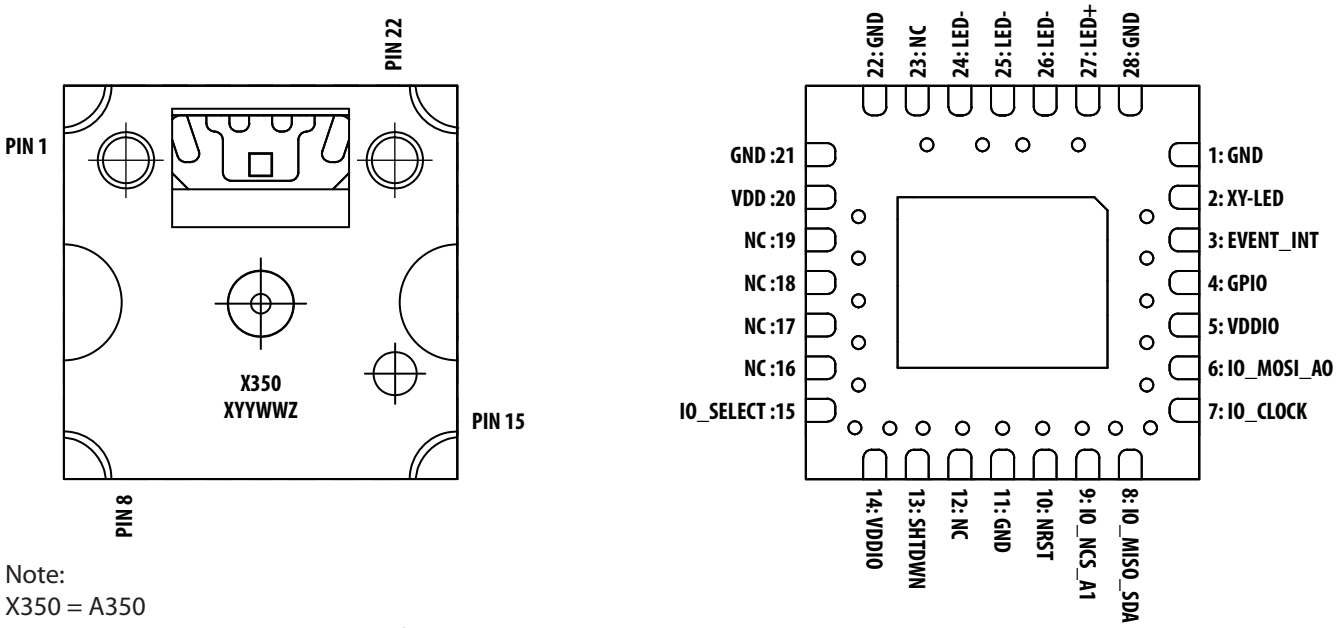

Note:
X350 = A350
XYYWWZ, where YY = last 2 digits of year, WW = work week

Figure 1. Package outline drawing

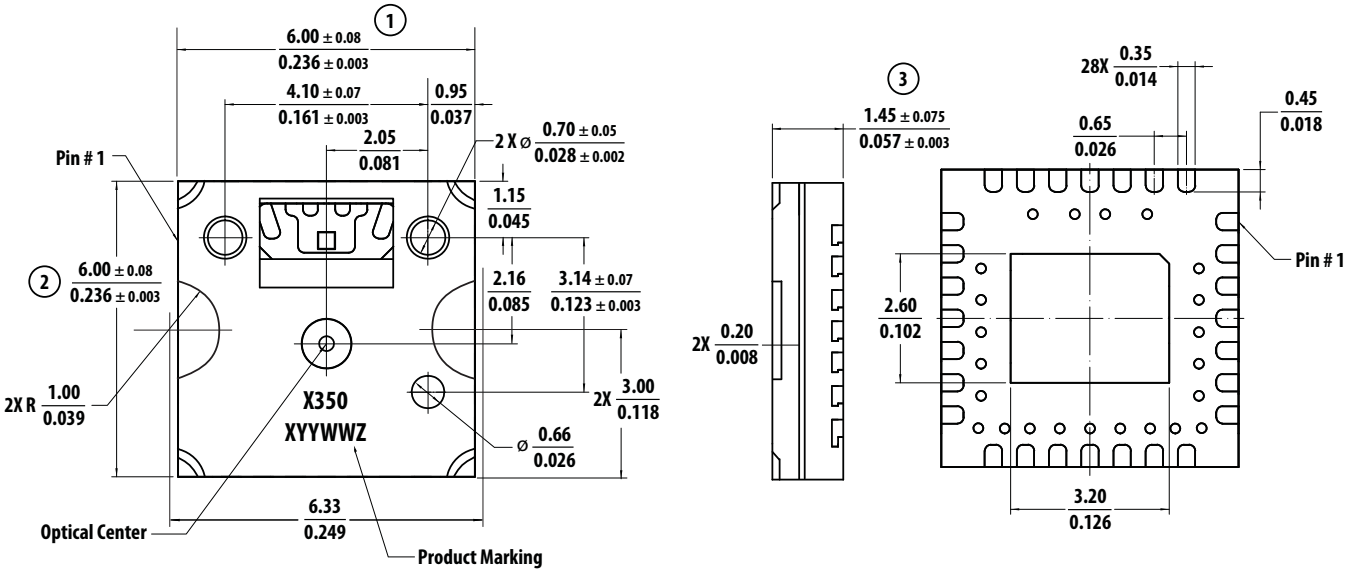

Figure 2. Package outline drawing

Overview of Optical Sensor Assembly

Avago Technologies provides an IGES file drawing describing the cover plate molding features.

The components interlock as they are mounted onto defined features on the cover plate.

The ADBS-A350 sensor is designed for surface mounting on a PCB, looking up. There is an aperture stop and features on the package that align to the lens.

The lens provides optics for the imaging of the surface as well as illumination of the surface at the optimum angle. Features on the lens align it to the sensor and cover plate. Contamination must be kept away from the lens. During assembly process, it is recommended to use a minimum of a 10K clean room environment or equivalent laminar flow workbench.

PCB Assembly Considerations

1. Surface mount the sensor and all other electrical components into PCB.
2. Reflow the entire assembly in a no-wash solder process.
3. Remove the protective kapton tape from optical aperture of the sensor and LED. Care must be taken to keep contaminants from entering the aperture. Recommend not to place the PCB facing up during the entire assembly process. Recommend to hold the PCB first vertically for the kapton removal process.
4. Press fit the lens onto the sensor until there is no gap between the lens and sensor, with force up to maximum 2.2 kgf. Care must be taken to avoid contaminating or staining the lens. The lens piece has alignment posts which will mate with the alignment holes on the sensor package.
5. Place and secure the optical navigation cover onto the lens to ensure the sensor and lens components are always interlocked to the correct vertical height. The cover design has a foolproof feature to avoid wrong orientation of the cover.
6. The optical position reference for the PCB is set by the navigation cover and lens.
7. Install device top casing. There MUST be a feature in either top casing or bottom casing to press onto the sensor to ensure the sensor and lens components are always interlocked to the correct vertical height.

Profiling Information

Max rising slope	0.0°C/sec to 3°C/sec
Preheat time 150 – 200° C, ts	60 – 90 sec
Time above Reflow (T_L = 220° C)	50 – 100 sec
Peak Temperature	225 – 260° C

Soldering Profile

The recommended soldering profile is shown below.

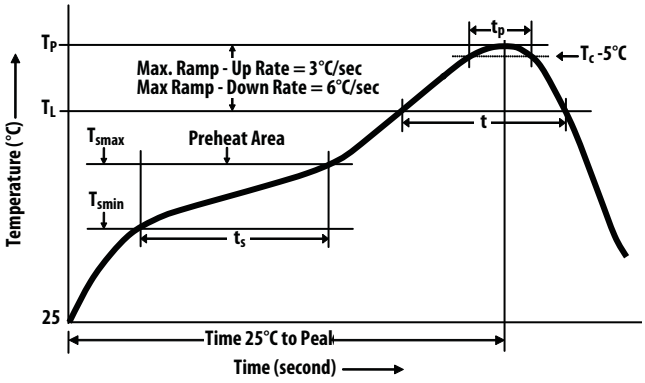

Figure 3a. Recommended reflow profile

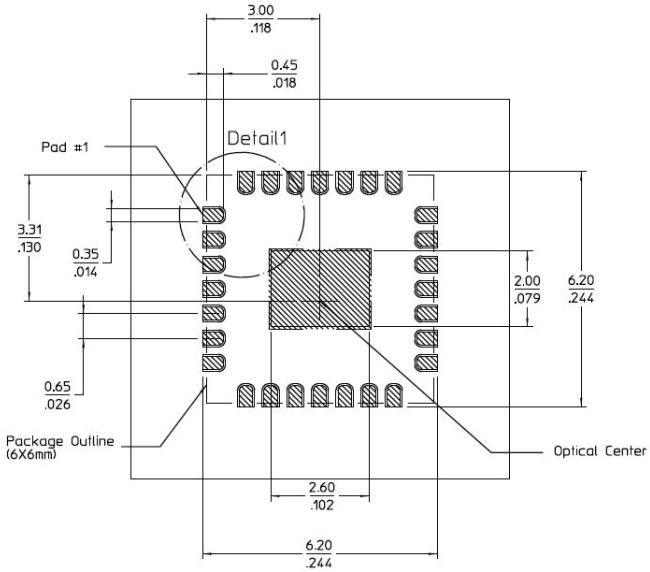

Figure 3b. Recommended Customer's PCB PADOUT and spacing

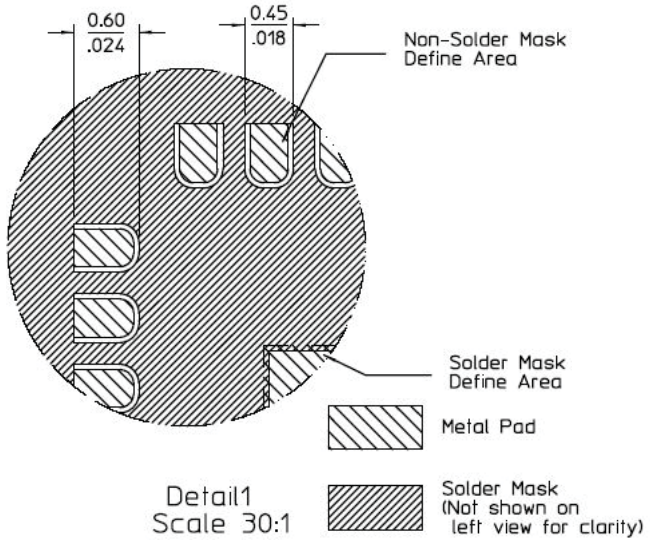

Figure 3c. Recommended Customer's PCB PADOUT and spacing

As ADBS-A350 is a QFN package, it is meant to be a contact-down package. The critical area for soldering ADBS-A350 is on the terminal undersides, while the terminal sides are deemed as non-critical area, and thus not intended to be wet-table. The non-wetting of the terminal sides is due to exposed copper on the package side (which is expected and accepted), occurred after the singulation step, which is a standard process in QFN assembly. This is in line with the Industry Standard (for more information, please refer to IPC-A-610D: Acceptability of Electronics Assemblies).

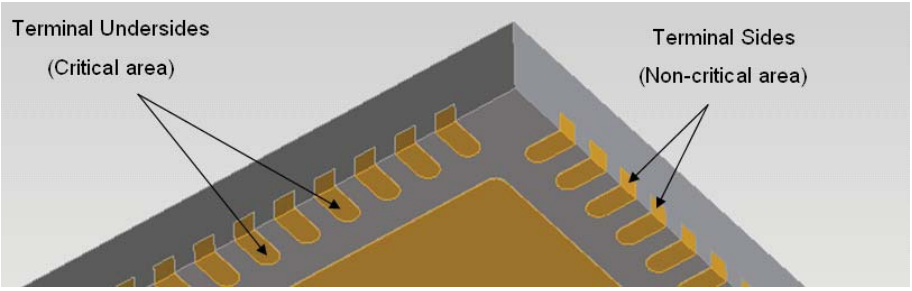

Figure 3d. Bottom view of A350 (QFN package)

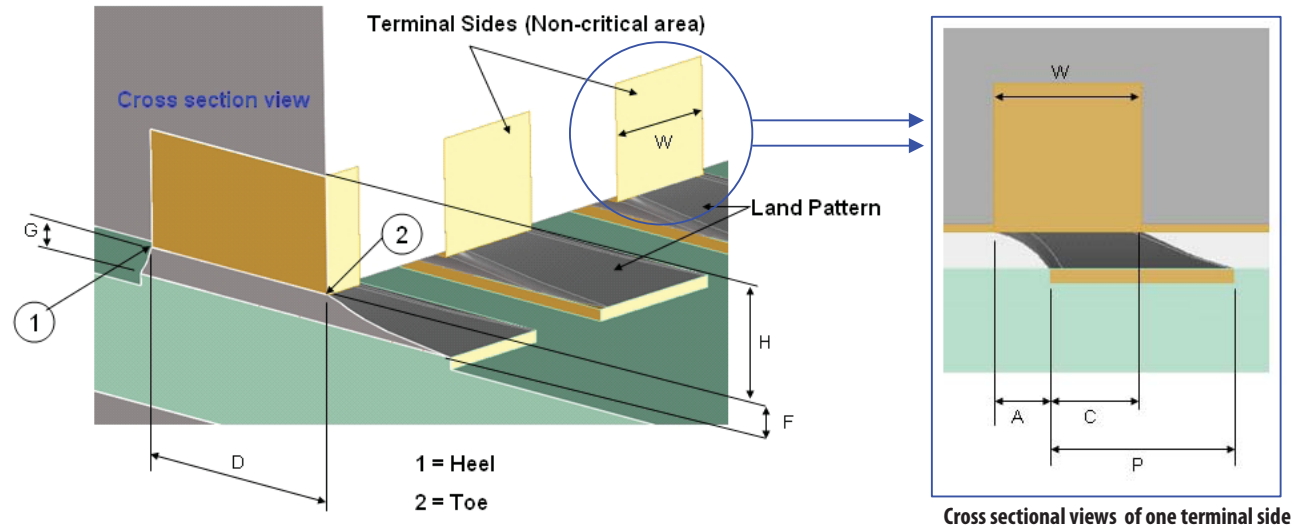

Figure 3e. Cross sectional views of A350

Critical and Non-critical areas of QFN soldering in Figure 3d and 3e

Feature	Dimension	Class 1	Class 2	Class 3
Maximum Side Overhang	A	50% W, Note 1	25% W, Note 1	25% W, Note 1
Minimum End Joint Width	C	50% W	75% W	75% W
Minimum Side Joint Length	D	Note 4	Note 4	Note 4
Minimum Fillet Height	F	Notes 2, 5	Notes 2, 5	Notes 2, 5
Solder Fillet Thickness	G	Note 3	Note 3	Note 3
Termination Height	H	Note 5	Note 5	Note 5
Land Width	P	Note 2	Note 2	Note 2
Termination Width	W	Note 2	Note 2	Note 2

Notes
1. Should not violate minimum electrical clearance.
2. Unspecified parameter. Variable in size as determined by design.
3. Good wetting is evident.
4. Is not a visual attribute for inspection.
5. Terminal sides are not required to be solderable. Toe fillets are not required.

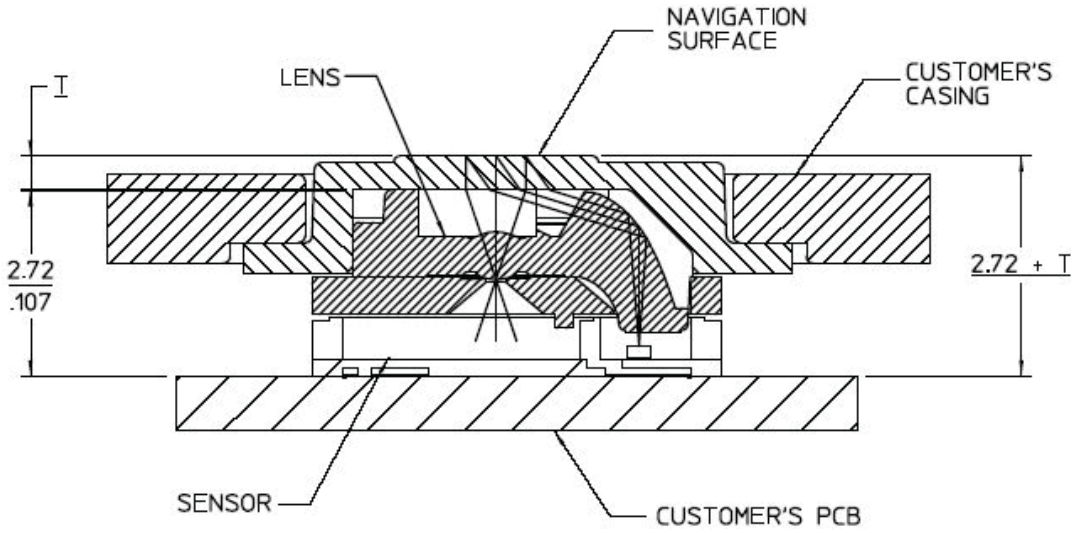

Figure 4. 2D Assembly drawing of ADBS-A350

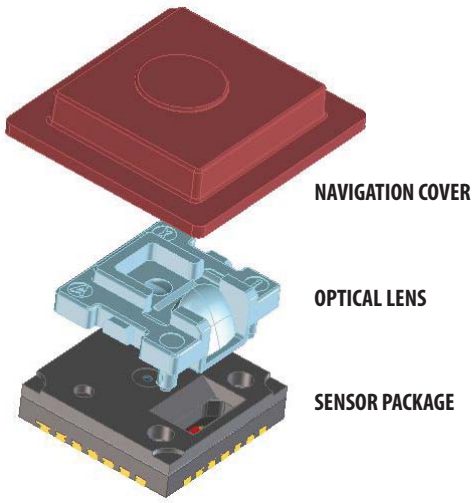

Figure 5a. Exploded Top view

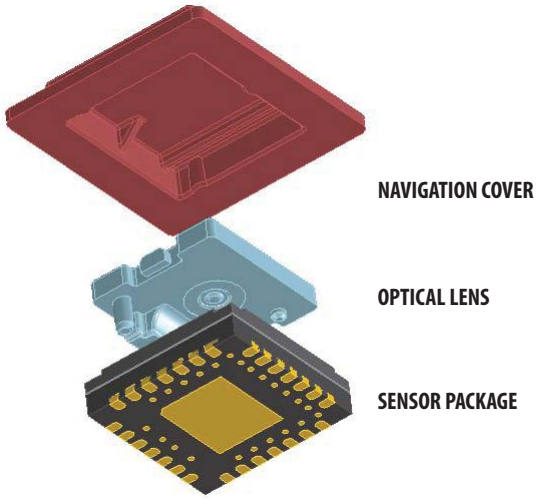

Figure 5b. Exploded Bottom view

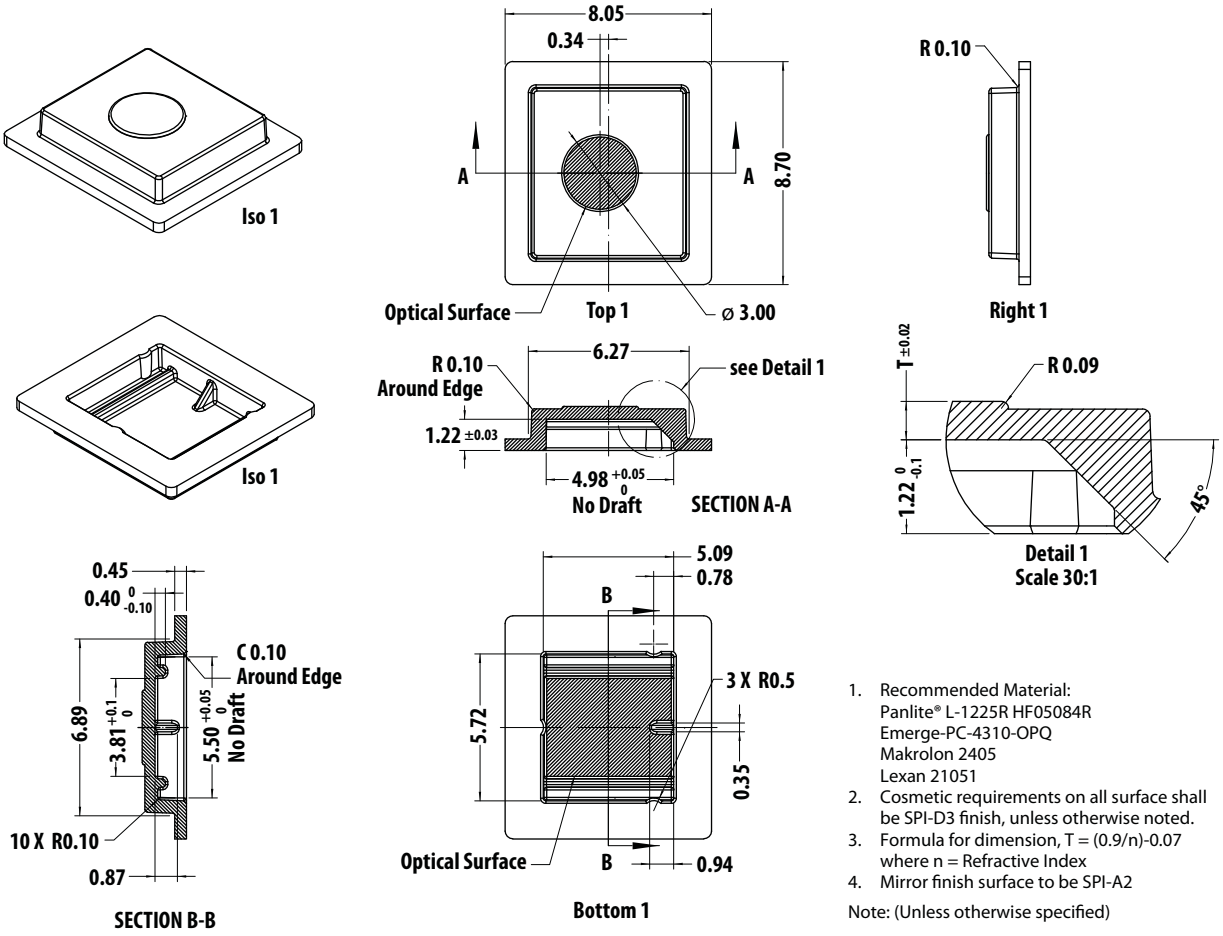

1. Recommended Material:
   Panlite® L-1225R HF05084R
   Emerge-PC-4310-OPQ
   Makrolon 2405
   Lexan 21051
2. Cosmetic requirements on all surface shall be SPI-D3 finish, unless otherwise noted.
3. Formula for dimension, T = (0.9/n)-0.07 where n = Refractive Index
4. Mirror finish surface to be SPI-A2

Note: (Unless otherwise specified)

Figure 6a. Top cover drawing design

Important notes for top cover designs:

1. The recommended transmissivity of top cover window is between 86%-92% from 800nm to 940nm with worst case minimum of 80% and maximum of 97% across this range of light spectrum.
2. The Assert/ Deassert thresholds must be recalculated and set in the sensor accordingly during initialization to address variation of surface reflection and transmissivity for custom cover designs. (See OFN firmware application note and OFN mechanical guide application note for further details).

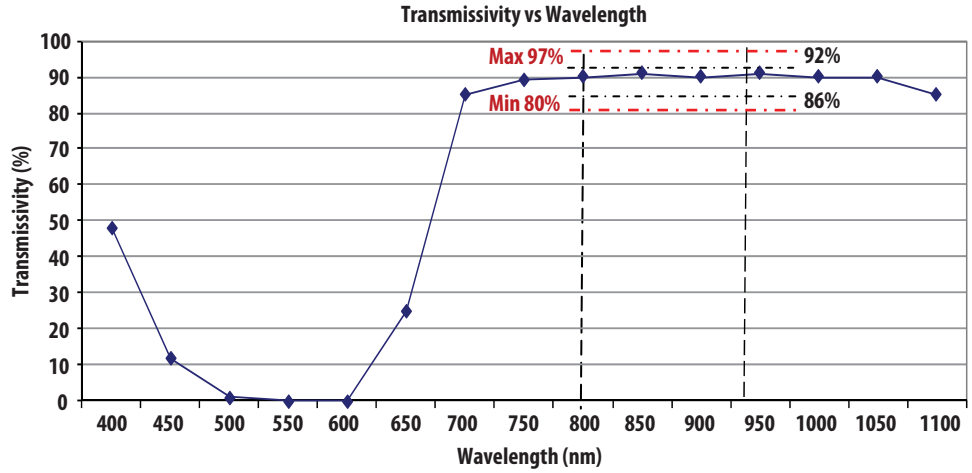

Figure 6b. Example of Transmissivity vs. Wavelength curve for standard Avago cover material

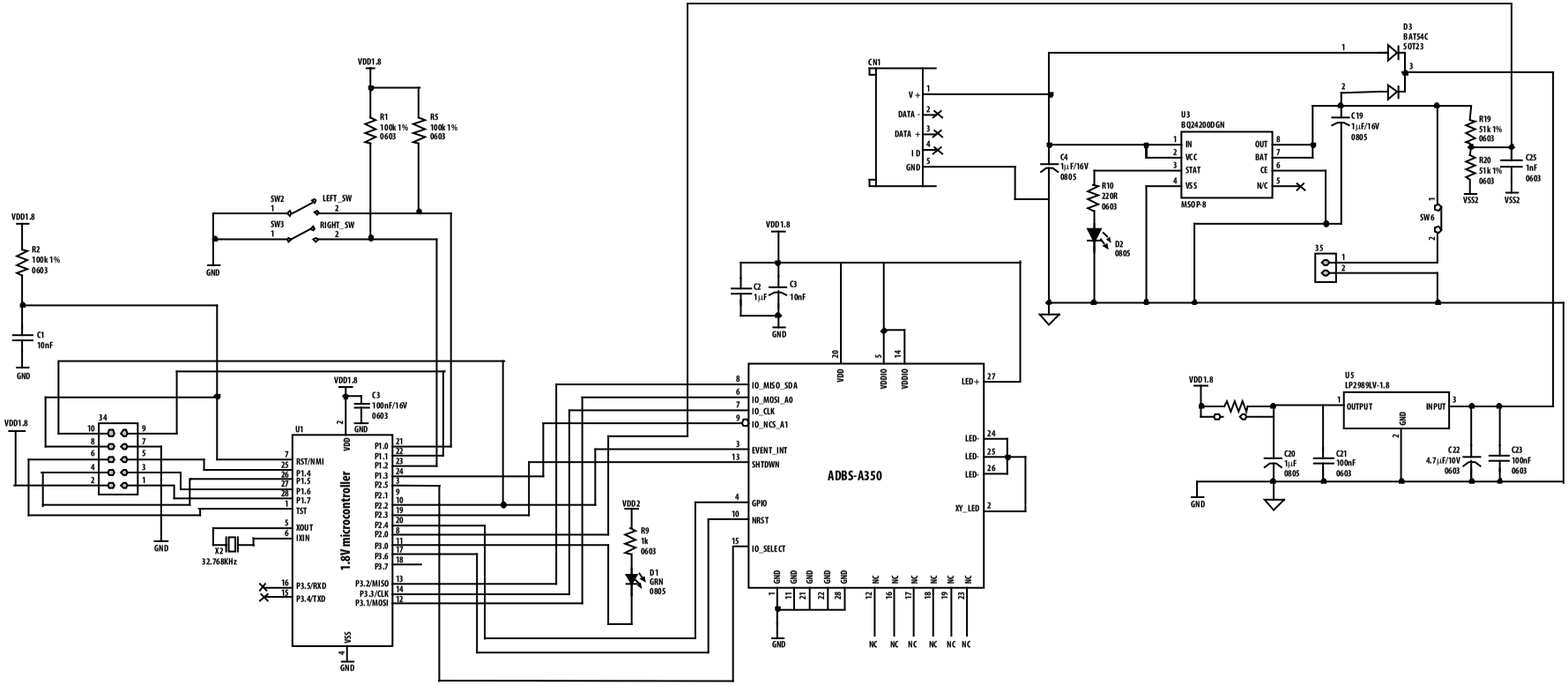

Note: Dome + must be connected to MCU to detect button change state and Dome – can be connected to GND.

Figure 7. Schematic diagram for interface between ADBS-A350 and 1.8 V microcontroller via SPI

Regulatory Requirements

- Passes FCC or CISPR 22 Class B emission limits when assembled following Avago Technologies recom-mendations.
- Passes IEC 61000-4-3 and IEC61000-4-6 Class A Immunity limits when assembled following Avago Technologies recommendation.

Absolute Maximum Ratings

Parameter	Symbol	Minimum	Maximum	Units	Notes
Storage Temperature	T_S	-40	85	°C	
Lead Solder Temp			260	°C	For 1.4 seconds
Moisture Sensitivity Level	MSL		1		Referring to JEDEC-J-STD-020
Analog and Digital Supply Voltage	VDD	-0.5	2.1	V	
I/O Supply Voltage	V_{DDIO}	-0.5	3.7	V	
LED Supply Voltage	V_{LED+}	-0.5	2.1	V	
ESD (sensor only)			2	kV	All pins, human body model JESD22-A114-E
Input Voltage	V_{IN}	-0.5	V_{DDIO}+0.5	V	
Latchup Current	Iout		20	mA	All Pins

Note: Stresses greater than those listed under "Absolute Maximum Ratings" may cause permanent damage to the device. These are the stress ratings only and functional operation of the device at these or any other condition beyond those indicated may affect device reliability.

Recommended Operating Conditions

Parameter	Symbol	Minimum	Typical	Maximum	Units	Notes
Operating Temperature	T_A	-20		70	°C	
Analog and Digital Supply Voltage [1]	V_{DD}	1.7	1.8	2.1	Volts	Including V_{NA} noise.
I/O Supply Voltage [2]	V_{DDIO}	1.65	1.8 or 2.8	3.6	Volts	Including V_{NA} noise. Sets I/O voltages. See fig 7.
LED Supply Voltage	V_{LED+}	1.7	1.8	2	Volts	Including V_{NA} noise.
Power Supply Rise Time	t_{VRT}	0.001		10	ms	0 to VDD. At minimum rise time, s/'
Power Supply Off Time for Valid POR (Power on Reset)	t_{OFF}	10			ms	Refer to section "POR During Power Cycling"
Power Off Voltage Level for Valid POR (Power on Reset)	V_{OFF}	0		300	mV	Refer to section "POR During Power Cycling"
Supply Noise (Sinusoidal)	V_{NA}			100	mV p-p	10 kHz - 50 MHz
Speed	S			20	in/sec	Using prosthetic finger as surface
Transient Supply Current	I_{DDT}			80	mA	Max supply current for 500 µsec for each supply voltages ramp from 0 to 1.8 V

Notes:
1. For operating temperature of less than -20°C down to -30°C, minimum V_{DD} of 1.8V must be met.
2. To ensure minimum leakage current, VDDIO should be greater than or equal to VDD.

Timing Specifications

Electrical Characteristics at 25° C, VDD=VDDIO=1.8V.

Parameter	Symbol	Minimum	Typical	Maximum	Units	Notes
Motion Delay After Reset	$t_{MOT-RST}$	3.5		23	ms	From Hard reset or SOFT_RESET register write to valid register write/ read and motion, assuming motion is present
Shutdown	t_{SHTDWN}			50	ms	From SHTDWN pin active to low current
Wake from Shutdown	t_{WAKEUP}	100			ms	From SHTDWN pin inactive to valid motion. Refer to section "Notes on Shutdown", also note $t_{MOT-RST}$
EVENT_INT Rise Time	$t_{r-EVENT_INT}$		150	300	ns	C_L = 100 pF
EVENT_INT Fall Time	$t_{f-EVENT_INT}$		150	300	ns	C_L = 100 pF
SHTDWN Pulse Width	$t_{P-SHTDWN}$	150			ms	
NRST Pulse Width	t_{NRST}	20			µs	From edge of valid NRST pulse
Reset Wait Time After Stable Supply Voltage	$t_{VRT-NRST}$	100			ms	

DC Electrical Specifications

Electrical Characteristics at 25° C, VDD=VDDIO=1.8V at default LED setting 13 mA.

Parameter		Typical	Max	Units	Notes
DC average supply current in Run mode	I VDD	1.56	2.13	mA	GPIO=SHTDWN=pull low, IO_MISO=NRST=pull high.
	IDD_LED+	1.34	1.90	mA	GPIO=SHTDWN=pull low, IO_MISO=NRST=pull high.
	Total	2.90	4.03	mA	
DC average supply current in Rest1 mode	I VDD	0.2	0.3	mA	GPIO=SHTDWN=pull low, IO_MISO=NRST=pull high.
	IDD_LED+	0.15	0.20	mA	GPIO=SHTDWN=pull low, IO_MISO=NRST=pull high.
	Total	0.35	0.50	mA	
DC average supply current in Rest2 mode	I VDD	0.04	0.07	mA	GPIO=SHTDWN=pull low, IO_MISO=NRST=pull high.
	IDD_LED+	0.03	0.05	mA	GPIO=SHTDWN=pull low, IO_MISO=NRST=pull high.
	Total	0.07	0.12	mA	
DC average supply current in Rest3 mode	I VDD	0.02	0.04	mA	GPIO=SHTDWN=pull low, IO_MISO=NRST=pull high.
	IDD_LED+	0.01	0.02	mA	GPIO=SHTDWN=pull low, IO_MISO=NRST=pull high.
	Total	0.03	0.06	mA	
Supply current during shutdown	IDDSHTDWN VDD	1.54	26.00	µA	GPIO=pull low, SHTDWN=IO_MISO=NRST=pull high.
LED current during shutdown	IDDSHTDWN VLED+	0	0.70	µA	GPIO=pull low, SHTDWN=IO_MISO=NRST=pull high.

DC Electrical Specifications

Electrical Characteristics at 25° C, VDD=VDDIO=1.8V at default LED setting 13 mA.

Parameter	Symbol	Minimum	Typical	Maximum	Units	Notes
V_{DDIO} DC Supply Current	I V_{DDIO}			20	µA	
Digital peak supply current	I_{PEAK} VDD			10	mA	
LED+ peak supply current	I_{PEAK} LED+			35	mA	At LED register setting of 27 mA
Input Low Voltage	V_{IL}	-0.05	0	V_{DDIO}*0.35	V	IO_MOSI_A0, IO_CLK, IO_MISO_SDA, IO_NCS_A1, NRST, SHTDWN, IO_SELECT
Input High Voltage	V_{IH}	V_{DDIO} * 0.7	V_{DDIO}	V_{DDIO}+0.05	V	IO_MOSI_A0, IO_CLK, IO_MISO_SDA, IO_NCS_A1, NRST, SHTDWN, IO_SELECT
Input hysteresis	V_{HYS}	100			mV	
Input leakage current	I_{leak}		±1	±10	µA	IO_MOSI_A0, IO_CLK, IO_MISO_SDA, IO_NCS_A1, NRST, SHTDWN, IO_SELECT
Output Low Voltage	V_{OL}			0.2	V	I_{out} = 1.2 mA
Output High Voltage	V_{OH}	V_{DDIO}-0.2	V_{DDIO}-0.1		V	I_{out} = 600 µA
Input Capacitance	C_{in}			10	pF	MOSI, NCS, SCLK, SHTDWN

Notes on Power-up Sequence

Below is the power up sequence for ADBS-A350:

For SPI:

1. Apply power. Refer timing diagram on power up sequence below.
2. Set IO_NCS_A1 pin high. Set SHTDWN pin low. Set IO_SELECT pin high.
3. Perform reset by driving NRST low then high OR by writing 0x5A to address 0x3A.
4. Read Product ID (PID) to ensure sensor is powered up and communicating properly with host.
5. Write 0xE4 to address 0x60
6. Write 0xC9 to address 0x61

For TWI:

1. Apply power. Refer timing diagram on power up sequence below.
2. Set SHTDWN and IO_SELECT pin low.
3. Set A0 and A1 according to the desired TWI slave address (from TWI slave address table in datasheet).
4. Drive NRST pin low then high. TWI slave address will only be valid and according to the address set in step 3 after a NRST toggle is applied.
5. Read Product ID (PID) to ensure sensor is powered up and communicating properly with host.
6. Write 0xE4 to address 0x60
7. Write 0xC9 to address 0x61

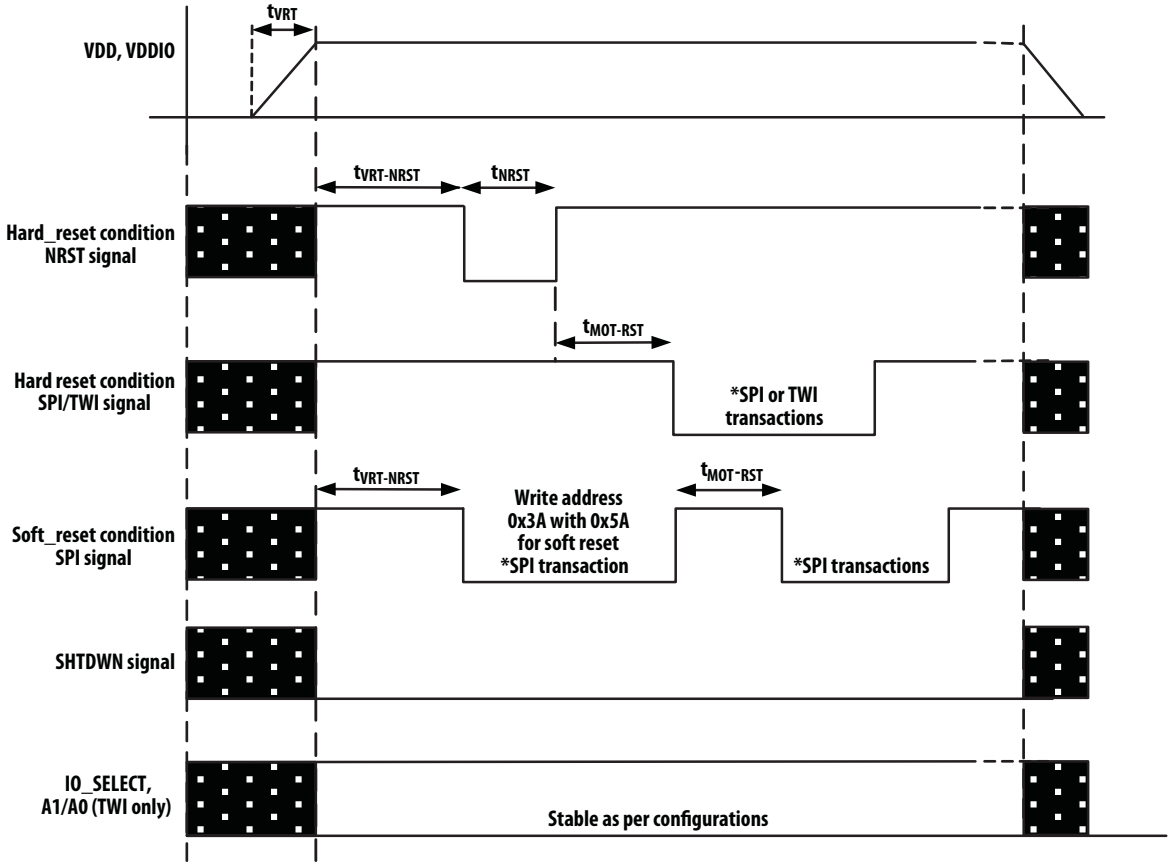

Note: Not to scale

Note on register settings

Please refer to the OFN A350 firmware design guide for tuning of Speed Switching, Assert/De-assert, Finger Presence Detect and XY Quantization register settings.

Notes on Shutdown and Reset

The ADBS-A350 can be set in Shutdown mode by asserting or setting SHTDWN pin high. During the shutdown state, supply voltages VDD must be maintained above the minimum level. If these conditions are not met, then the sensor must be restarted by powering down then powering up again for proper operation. Any register settings must then be reloaded.

During the shutdown state, supply voltage VDD must be maintained above the minimum level. For proper operation, SHTDWN pulse width must be at least $t_{P\text{-}SHTDWN}$. Shorter pulse widths may cause the chip to enter an undefined state. In addition, the SPI or TWI port of the sensor should not be accessed when SHTDWN is asserted. Other devices on the same SPI bus can be accessed, as long as the sensor's NCS pin is not asserted. The table below shows the state of various pins during shutdown. After deasserting SHTDWN, wait t_{WAKEUP} before accessing the SPI port. Reinitializing the sensor from shutdown state will retain all register data that were written to the sensor prior to shutdown.

The reset of the sensor via SOFT_RESET register or through the NRST pin would reset all registers to the default value. Any register settings must then be reloaded.

Pin	SHTDWN active
IO_NCS_A1	Functional
IO_MISO_SDA	Undefined
IO_CLK	Undefined
IO_MOSI_A0	Undefined
XY_LED	Low current
EVENT_INT	Undefined
NRST	High
IO_Select	SPI: High, TWI: Low
GPIO	Undefined

Note: There are long wakeup times from shutdown. These features should not be used for power management during normal sensor motion.

Power on Reset (POR) During Power Cycling

t_{VRT} is the power supply (VDD) rise time specification for a valid power on reset to happen when the sensor is powered up from 0V to VDD. At condition whereby the VDD of the sensor is cycled from VDD to 0 V and then to VDD again, the two parameters that govern a valid power on reset are v_{OFF} and t_{OFF}. Refer to timing diagram below.

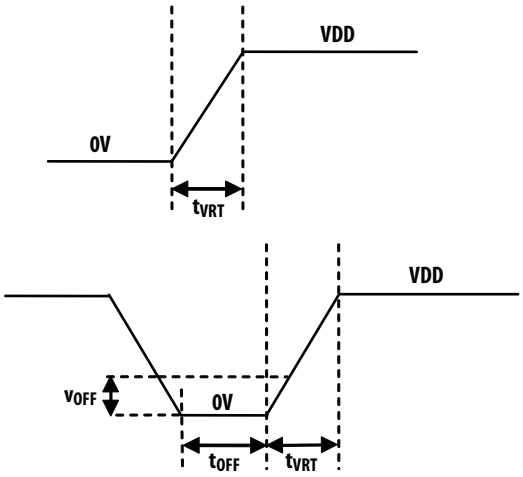

Figure 8. Power on Reset during power cycling

Power management modes

The ADBS-A350 has three power-saving modes. Each mode has a different motion detection period, affecting response time to sensor motion (Response Time). The sensor automatically changes to the appropriate mode, depending on the time since the last reported motion (Downshift Time). The parameters of each mode are shown in the following table.

Mode	Response Time (nominal)	Downshift Time (nominal)
Rest 1	19.5 ms	250 ms
Rest 2	96 ms	9.5 s
Rest 3	482 ms	582 s

EVENT_INT Pin

The Event_Int pin is a level-sensitive interrupt output that is used to trigger the host micro-controller when one of these events occurs:

- FPD – A change in finger state (finger on to finger off and vice versa) is detected
- Soft Click – Soft Click is detected
- Button – Mechanical button is asserted or de-asserted
- Motion – Motion delta is present.

A read to event register is required to determine the specific event that toggles the interrupt for user to act upon.

The EVENT_INT will be reset after the user responds to it by reading the respective event status register:

- FPD – reading FPD_STATUS register (0x7a)
- Soft Click – reading SC_STATUS register (0x7f)
- Button – reading BUTTON_STATUS register (0x12)
- Motion – reading DELTA_X and DELTA_Y registers until motion are cleared.

GPIO Pin

The GPIO pin is a level-sensitive input/ output that can be used as

- FPD output – to display FPD status
- Pulse Width Modulated (PWM) output – to control LED driver to enable illumination feature in a product eg mobile phone
- Dome/ Button click input – can be connected to a dome switch that provides an input to the sensor and when a click is detected, sensor can respond by triggering button interrupt and channel the interrupt status through EVENT pin.

Refer to A350 Firmware Design Guide for more details and settings of registers for these features.

LED Mode

For power savings, the LED will not be continuously on. ADBS-A350 will flash the LED only when needed.

I/O Pin Status Test

This feature allows the user to verify the connectivity and the state of the I/O pin.

To run the test for input pins such as GPIO, SHUTDOWN, NRST and IO_SELECT, first enable the PAD_Chk_On bit (or bit-1) of OFN_ENGINE2 (0x61) register. Then write any value to PAD_STATUS (0x31) register to start the test. Wait for approximately 12us before reading the actual pin status and PAD_STATUS register. The test will be considered a PASS to indicate the sensor is responding accordingly if the actual pin status matches PAD_STATUS register content. Refer to the table below for I/O pin status definition.

For output pins (EVENT_INT, GPIO, MOSI and MISO) testing, first enable bit-4 of PAD_FUNCTION (0x34) register. Then program or set the output state via PAD_TEST_OUT register (0x33) and do a READ on the actual pin status. Actual pin status results should match the output set in PAD_TEST_OUT. (Note: SPI/TWI communication will be disabled after this test is enabled. Once this test is completed, an external hardware reset on sensor is required)

Bit(s)	Name	Reset	Description	Remarks
7:6	NRST_STATE	0x0	0x0: unknown	
			0x1: Low	Invalid as the chip will be in reset state.
			0x2: High	
			0x3: Hi-Z	Indicate a floating high
5:4	SHUTDOWN_STATE	0x0	0x0: unknown	
			0x1: Low	
			0x2: High	Invalid as the chip will be in shutdown state.
			0x3: Hi-Z	Indicate a floating low
3:2	GPIO_STATE	0x0	0x0: unknown	
			0x1: Low	
			0x2: High	
			0x3: Hi-Z	
1:0	IO_SELECT_STATE	0x0	0x0: unknown	
			0x1: Low	
			0x2: High	
			0x3: Hi-Z	

Fast Video Dump

ADBS-A350 comes with a unique feature that enables user to capture the image the optical sensor is seeing on the tracking surface. This is achieved through storing the pixel data, transferring or dumping the pixels data out to the host for processing and rebuilding the video dump image. The rebuilding of video dump image is mainly converting each 8-bit pixel data to form a grayscale digital image.

Some useful applications for this feature are sensor contamination inspection at manufacturing lines, image recognition, motion sensing applications and etc.

Fast Video Dump Setups and Commands

Fast Video Dump (FVD) in the sensor requires three main signal lines for communications with host MCU as shown below.

Pin	Status	Description
GPIO	Input	24MHz clock signal
MISO_SDA	Output	Pixel data bits 7 to 4
EVENT_INT	Output	Pixel data bits 3 to 0

Connect an external clock signal of up to 24MHz to GPIO pin. Execute the FVD commands below and capture the 64burst cycles of data clocked out on the two output pins (MISO_SDA and EVENT_INT).

FVD Commands

1. Power up sensor
2. Read register 0x00, to get returned value of 0x88 for correct product ID (ensure communication with sensor is established)
3. Write register 0x3a with 0x5a
4. Write register 0x11 with 0x53
5. Write register 0x30 with 0x13
6. Write register 0x2b with 0x30
7. Write register 0x2c with 0x13
8. Write register 0x28 with 0x01 to initiate video dump.
9. Sensor will start to video dump for about 500ms (see timing diagram on signals decoding versus actual signal captured).
10. Once video dump is completed, write register 0x3a with 0x5a to soft reset sensor back to normal operation.

    (Note: During FVD, the sensor is in 3-wire SPI communication with host MCU by design. Therefore a soft reset is necessary to reset back to 4-wire SPI communication for normal operation or to perform another FVD)
11. To capture another 64 burst cycles, repeat Step 2- Step10.

Video Dump Signals Capturing and Decoding

64 burst cycles of FVD will be present on the MISO_SDA and EVENT_INT pins after executing the fast video dump commands.

Zooming into each burst cycle, 3 frames in each burst cycle will be observed.



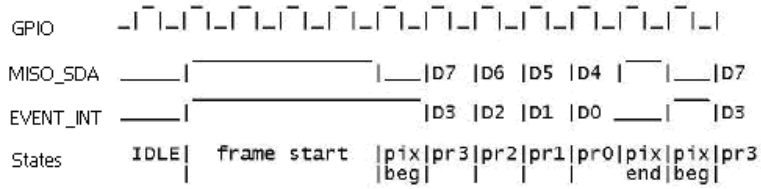

Figure 9. Signals for frame start

As shown in Figure 9 above, frame start of video dump is denoted by MISO_SDA pin and EVENT_INT pin clocking high for 4 clock cycles or 4 x b'11 (binary 11). Then after 4 clock cycles, MISO_SDA pin will go low and EVENT_INT pin remains high. This indicates pixel begin state.

The pixel read data will start to clock thereafter. Subsequent 4 bits are D7-D4 (on MISO_SDA) and D3-D0 (on EVENT_INT) followed by b'10 for pixel end (b'1 in MISO_SDA, b'0 in EVENT_INT). This completes the first pixel data (address 0). The next pixel data (address 1) will begin with pixel begin state (b'01- 0 in MISO_SDA, 1 in EVENT_INT) header followed by the 4 clock cycles of data followed by a pixel end state in the same manner. This will continue until all the 361 pixels (19x19 pixel array) data is read. Once done, the pixel end of the pixel data (address 360) will be followed by frame end state (b'00 – 0 in MISO_SDA, 0 in EVENT_INT). Refer to Figure 10.

Below is the pixel array address map. The figure shows the view of the chip from the top of the OFN aperture. Rows are read from top to bottom and columns from left to right.

Pin 1

0	1	2	3	4	5	6	7	8	9	10	11	12	13	14	15	16	17	18
19	20	21	22	23	24	25	26	27	28	29	30	31	32	33	34	35	36	37
38	39	40	41	42	43	44	45	46	47	48	49	50	51	52	53	54	55	56
57	58	59	60	61	62	63	64	65	66	67	68	69	70	71	72	73	74	75
76	77	78	79	80	81	82	83	84	85	86	87	88	89	90	91	92	93	94
95	96	97	98	99	100	101	102	103	104	105	106	107	108	109	110	111	112	113
114	115	116	117	118	119	120	121	122	123	124	125	126	127	128	129	130	131	132
133	134	135	136	137	138	139	140	141	142	143	144	145	146	147	148	149	150	151
152	153	154	155	156	157	158	159	160	161	162	163	164	165	166	167	168	169	170
171	172	173	174	175	176	177	178	179	180	181	182	183	184	185	186	187	188	189
190	191	192	193	194	195	196	197	198	199	200	201	202	203	204	205	206	207	208
209	210	211	212	213	214	215	216	217	218	219	220	221	222	223	224	225	226	227
228	229	230	231	232	233	234	235	236	237	238	239	240	241	242	243	244	245	246
247	248	249	250	251	252	253	254	255	256	257	258	259	260	261	262	263	264	265
266	267	268	269	270	271	272	273	274	275	276	277	278	279	280	281	282	283	284
285	286	287	288	289	290	291	292	293	294	295	296	297	298	299	300	301	302	303
304	305	306	307	308	309	310	311	312	313	314	315	316	317	318	319	320	321	322
323	324	325	326	327	328	329	330	331	332	333	334	335	336	337	338	339	340	341
342	343	344	345	346	347	348	349	350	351	352	353	354	355	356	357	358	359	360

Pin 18

The signal to indicate the end of the video dump frame is shown in Figure 10 below where pix end state is followed by a low in both MISO_SDA and EVENT_INT. This will inform the Host of the pixel end and frame end state.

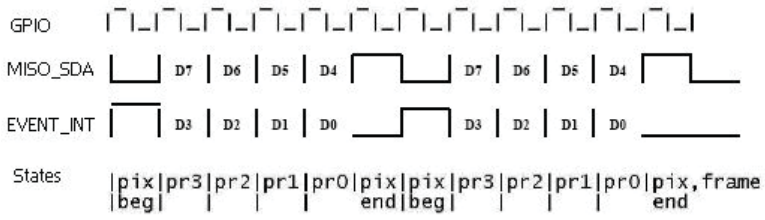

Figure 10. Frame End

Note: It is advisable to have a counter at the Host to keep count of the number of pixel addresses and data byte. If the number of pixel data byte does not correspond to the sensor number of pixel then this video dump data is invalid. In this case the sensor must be reset and a new video dump must be initiated.

Fast Video Dump Image

These are some examples of grayscale images captured using fast video dump on an object 'A' (size of 1mmx1mm) at the surface of the sensor that is converted from the fast video dump data.

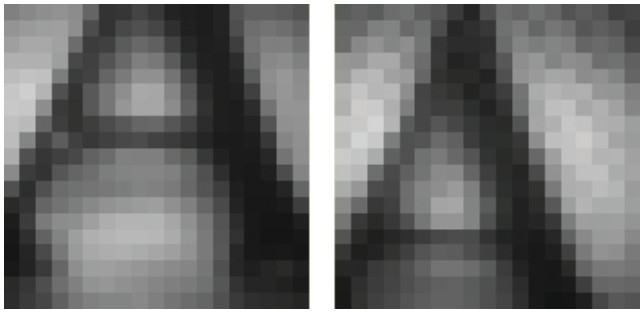

4-wire Serial Peripheral Interface (SPI)

SPI Specifications

Electrical Characteristics over recommended operating conditions. Typical values at 25° C, VDD = 1.8 V.

Parameter	Symbol	Minimum	Typical	Maximum	Units	Notes
Serial Port Clock Frequency	f_{sclk}			1	MHz	Active drive, 50% duty cycle
MISO rise time	$t_{r\text{-}MISO}$		150	300	ns	C_L = 100 pF
MISO fall time	$t_{f\text{-}MISO}$		150	300	ns	C_L = 100 pF
MISO delay after SCLK	t_{DLY_MISO}			120	ns	From SCLK falling edge to MISO data valid, no load conditions
MISO hold time	t_{hold_MISO}	0.5		$1/f_{SCLK}$	µs	Data held until next falling SCLK edge
MOSI hold time	t_{hold_MOSI}	200			ns	Amount of time data is valid after SCLK rising edge
MOSI setup time	t_{setup_MOSI}	120			ns	From data valid to SCLK rising edge
SPI time between write commands	t_{SWW}	30			µs	From rising SCLK for last bit of the first data byte, to rising SCLK for last bit of the second data byte.
SPI time between write and read commands	t_{SWR}	20			µs	From rising SCLK for last bit of the first data byte, to rising SCLK for last bit of the second address byte.
SPI time between read and subsequent commands	t_{SRW} t_{SRR}	500			ns	From rising SCLK for last bit of the first data byte, to falling SCLK for the first bit of the address byte of the next command.
SPI read address-data delay	t_{SRAD}	4			µs	From rising SCLK for last bit of the address byte, to falling SCLK for first bit of data being read.
NCS inactive after motion burst	t_{BEXIT}	500			ns	Minimum NCS inactive time after motion burst before next SPI usage
NCS to SCLK active	$t_{NCS\text{-}SCLK}$	120			ns	From NCS falling edge to first SCLK falling edge
SCLK to NCS inactive (for read operation)	$t_{SCLK\text{-}NCS}$	120			ns	From last SCLK rising edge to NCS rising edge, for valid MISO data transfer
SCLK to NCS inactive (for write operation)	$t_{SCLK\text{-}NCS}$	20			us	From last SCLK rising edge to NCS rising edge, for valid MOSI data transfer
NCS to MISO high-Z	$t_{NCS\text{-}MISO}$			500	ns	From NCS rising edge to MISO high-Z state

The synchronous serial port is used to set and read parameters in the ADBS-A350, and to read out the motion information.

The port is a four wire serial port. The host micro-controller always initiates communication; the ADBS-A350 never initiates data transfers. SCLK, MOSI, and NCS may be driven directly by a micro-controller. The port pins may be shared with other SPI slave devices. When the NCS pin is high, the inputs are ignored and the output is tri-stated.

The lines that comprise the 4-wire SPI port:

SCLK: Clock input. It is always generated by the master (the micro-controller).

MOSI: Input data. (Master Out/Slave In)

MISO: Output data. (Master In/Slave Out)

NCS: Chip select input (active low). NCS needs to be low to activate the serial port; otherwise, MISO will be high Z, and MOSI & SCLK will be ignored. NCS can also be used to reset the serial port in case of an error.

Chip Select Operation

The serial port is activated after NCS goes low. If NCS is raised during a transaction, the entire transaction is aborted and the serial port will be reset. This is true for all transactions. After a transaction is aborted, the normal address-to-data or transaction-to-transaction delay is still required before beginning the next transaction. To improve communication reliability, all serial transactions should be framed by NCS. In other words, the port should not remain enabled during periods of non-use because ESD events could be interpreted as serial communication and put the chip into an unknown state. In addition, NCS must be raised after each burst-mode transaction is complete to terminate burst-mode. The port is not available for further use until burst-mode is terminated.

Write Operation

Write operation, defined as data going from the micro-controller to the ADBS-A350, is always initiated by the micro-controller and consists of two bytes. The first byte contains the address (seven bits) and has a "1" as its MSB to indicate data direction. The second byte contains the data. The ADBS-A350 reads MOSI on rising edges of SCLK.

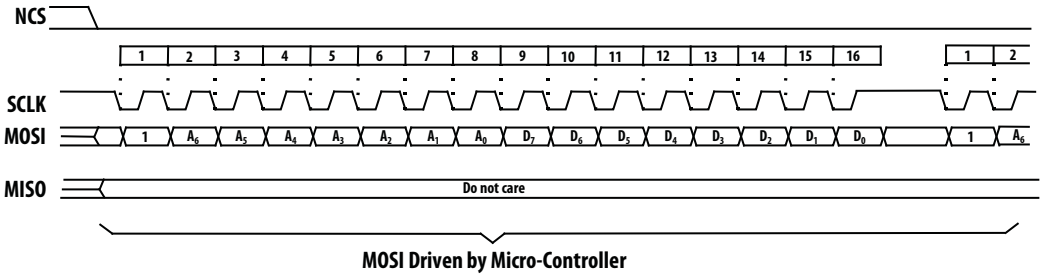

Figure 11. Write Operation

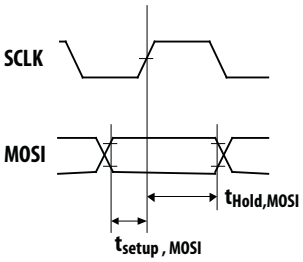

Figure 12. MOSI Setup and Hold Time

Read Operation

A read operation, defined as data going from the ADBS-A350 to the micro-controller, is always initiated by the micro-controller and consists of two bytes. The first byte contains the address, is sent by the micro-controller over MOSI, and has a "0" as its MSB to indicate data direction. The second byte contains the data and is driven by the ADBS-A350 over MISO. The sensor outputs MISO bits on falling edges of SCLK and samples MOSI bits on every rising edge of SCLK.

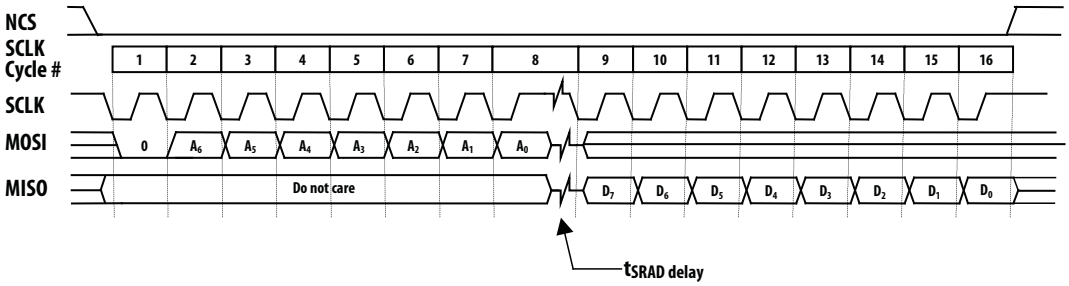

Figure 13. Read Operation

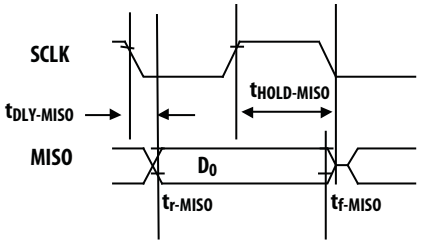

NOTE: The $0.5/f_{SCLK}$ minimum high state of SCLK is also the minimum MISO data hold time of the ADBS-A350. Since the falling edge of SCLK is actually the start of the next read or write command, the ADBS-A350 will hold the state of data on MISO until the falling edge of SCLK.

Figure 14. MISO Delay and Hold Time

Required timing between Read and Write Commands

There are minimum timing requirements between read and write commands on the serial port.

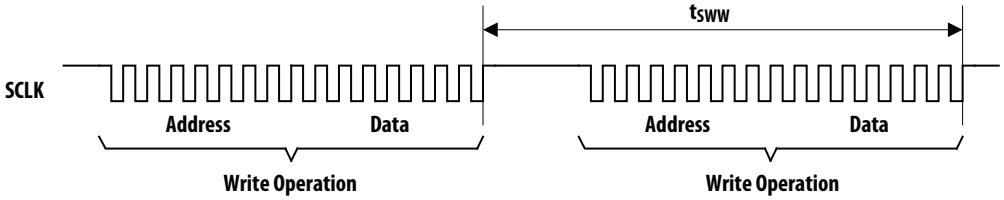

Figure 15. Timing between two write commands

If the rising edge of the SCLK for the last data bit of the second write command occurs before the required delay (t_{SWW}), then the first write command may not complete correctly.

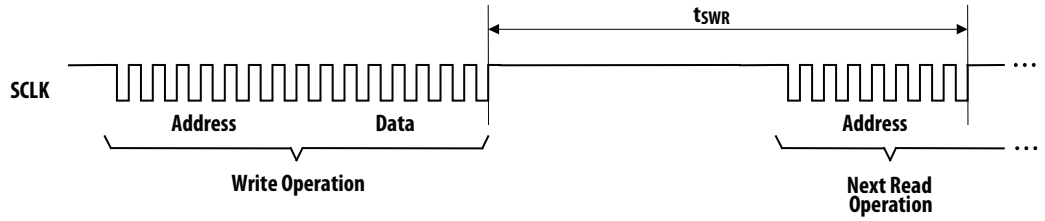

Figure 16. Timing between write and read commands

If the rising edge of SCLK for the last address bit of the read command occurs before the required delay (t_{SWR}), the write command may not complete correctly.

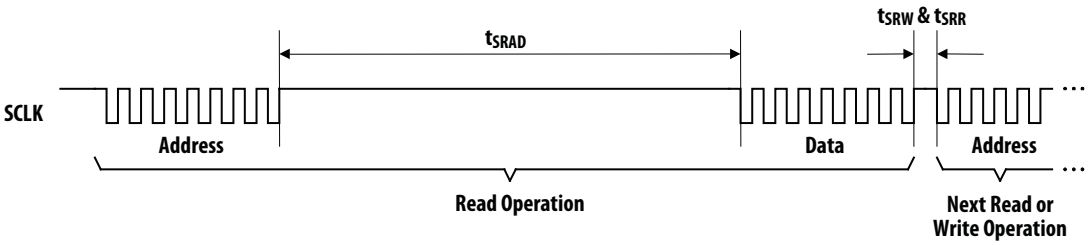

Figure 17. Timing between read and either write or subsequent read commands

During a read operation SCLK should be delayed at least t_{SRAD} after the last address data bit to ensure that the ADBS-A350 has time to prepare the requested data. The falling edge of SCLK for the first address bit of either the read or write command must be at least t_{SRR} or t_{SRW} after the last SCLK rising edge of the last data bit of the previous read operation.

Burst Mode Operation

Burst mode is a special serial port operation mode that may be used to reduce the serial transaction time for a motion read. The speed improvement is achieved by continuous data clocking from multiple registers without the need to specify the register address, and by not requiring the normal delay period between data bytes.

Burst mode is activated by writing 0x10 to register 0x1c IO_MODE. Then the burst mode data can be read by reading the Motion register 0x02. The ADBS-A350 will respond with the contents of the Motion, Delta_Y, Delta_X, SQUAL, Shutter_Upper, Shutter_Lower and Maximum_ Pixel registers in that order. The burst transaction can be terminated after the first 3 bytes of the sequence are read by bringing the NCS pin high. After sending the register address, the micro-controller must wait t_{SRAD} and then begin reading data. All data bits can be read with no delay between bytes by driving SCLK at the normal rate. The data is latched into the output buffer after the last address bit is received. After the burst transmission is complete, the micro-controller must raise the NCS line for at least t_{BEXIT} to terminate burst mode. The serial port is not available for use until it is reset with NCS, even for a second burst transmission.

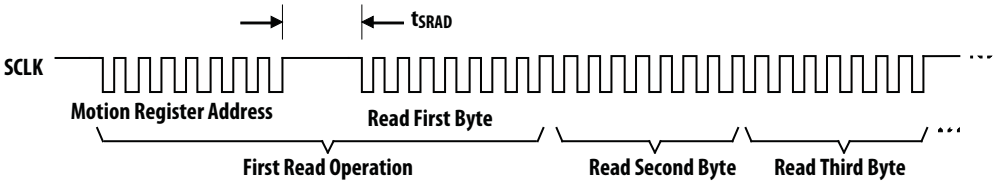

Figure 18. Motion Burst Timing

Two – Wire Interface (TWI)

ADBS-A350 uses a two-wire serial control interface compatible with I2C. The parameters are listed below.

TWI Specifications

Electrical Characteristics over recommended operating conditions. Typical values at 25° C, VDD = 1.8 V.

Parameter	Symbol	Minimum	Maximum	Units	Notes
SCL clock frequency	fscl		400	kHz	
Hold time (repeated) START condition. After this period, the first clock pulse is generated	t_{HD_STA}	0.6	–	µs	
LOW period of the SCL clock	t_{LOW}	1.0	–	µs	
HIGH period of the SCL clock	t_{HIGH}	0.6	–	µs	
Set up time for a repeated START condition	t_{SU_STA}	0.6	–	µs	
Data hold time	t_{HD_DAT}	0(2)	0.9(3)	µs	
Data set-up time	t_{SU_DAT}	100	–	ns	
Rise time of both SDA and SCL signals	t_r	$20+0.1C_b$(4)	300	ns	
Fall time of both SDA and SCL signals	t_f	$20+0.1C_b$(4)	300	ns	
Set up time for STOP condition	t_{SU_STO}	0.6	–	µs	
Bus free time between a STOP and START condition	t_{BUF}	1.3	–	µs	
Capacitive load for each bus line	C_b	–	400	pF	
Noise margin at the LOW level for each connected device (including hysteresis)	V_{NL}	0.1 VDD	–	V	
Noise margin at the HIGH level for each connected device (including hysteresis)	V_{NH}	0.2 VDD		V	

Notes:
1. All values referred to V_{IHMIN} and V_{ILMAX} levels.
2. A device must internally provide a hold time of at least 300 ns for the SDA signal (referred to the V_{IHMIN} of the SCL signal) to bridge the undefined region of the falling edge of SCL.
3. The maximum has t_{HD_DAT} only to be met if the device does not stretch the LOW period (t_{LOW}) of the SCL signal.
4. C_B = total capacitance of one bus line in pF.

The ADBS-A350 responds to one of the following selectable slave device addresses depending on the IO_MOSI_A0 and IO_NCS_A1 input pin state. These pins should be set to avoid conflict with any other devices that might be sharing the bus.

Table 1. TWI slave address

A0	A1	Slave Address (Hex)
0	0	33
0	1	3b
1	0	53
1	1	57

Serial Transfer Clock and Serial Data signals

The serial control interface uses two signals: a serial transfer clock (SCL) signal and a serial data (SDA) signal. Always driven by the master, SCL synchronizes the serial transmission of data bits on SDA. The frequency of SCL may vary throughout a transfer, as long as the timing is greater than the minimum timing.

SDA is bi-directional. The host (master) can read from or write to the ADBS-A350. The host (typically a microcontroller) drives SCL and SDA in a write operation or requesting information from the ADBS-A350. The ADBS-A350 drives the SDA only under two conditions. First, when responding with an acknowledge (ACK) bit after receiving data from the host, or second, when sending data to the host at the host's request. Data is sent in Eight-bit packets.

Start and Stop of Synchronous Operation

The host initiates and terminates all data transfers. Data transfers are initiated by driving SDA from high to low while holding SCL high. Data transfers are terminated by driving SDA from low to high while SCL is held high.

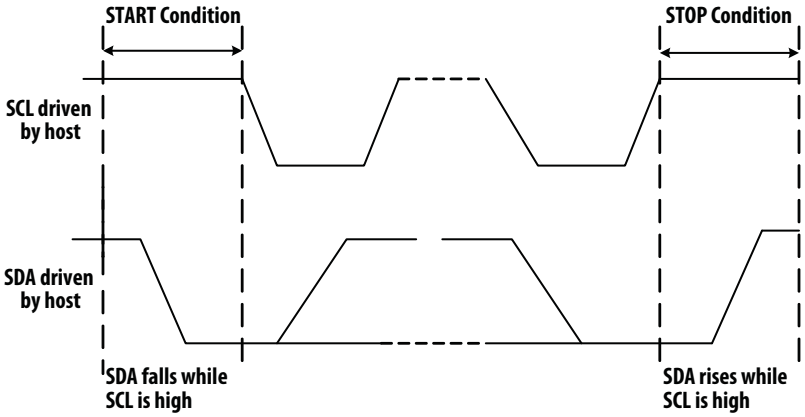

Figure 19. TWI Start and Stop operation

Acknowledge/Not Acknowledge Bit

After a start condition, a single acknowledge/not acknowledge bit follows each Eight-bit data packet. The device receiving the data drives the acknowledge/not acknowledge signal on SDA. Acknowledge (ACK) is defined as 0 and not acknowledge (NAK) is defined as 1.

Packet Formats

Read and write operations between the host and the ADBS-A350 use three types of host driven packets and one type of ADBS-A350 driven packet. All packets are eight bits long with the most significant bit first, followed by an acknowledge bit.

Slave Device Address (DA)

Command packets contain a 7-bit ADBS-A350 device address and an active low read/write bit (R/W).

First bit of packet							Last bit of packet
Device Address							R/$\overline{W}$
DA[6]	DA[5]	DA[4]	DA[3]	DA[2]	DA[1]	DA[0]	Write = 0 Read = 1

Register Address Packets (RA)

The address packets contain an auto-increment (ai) bit and a 7-bit address. If the 'ai' bit is set, the slave will process data from successive addresses in successive bytes. For example, registers 0x01, 0x02, and 0x03 can be written by setting the 'ai' bit to one with address 0x01. The host would send three bytes of data, and the host would terminate with a P condition.

First bit of packet							Last bit of packet
Auto increment	Register Address						
Auto increment=1, No increment=0	RA[6]	RA[5]	RA[4]	RA[3]	RA[2]	RA[1]	RA[0]

Data Packet (DP)

Contains 8 data bits and may be sent by the host or the ADBS-A350.

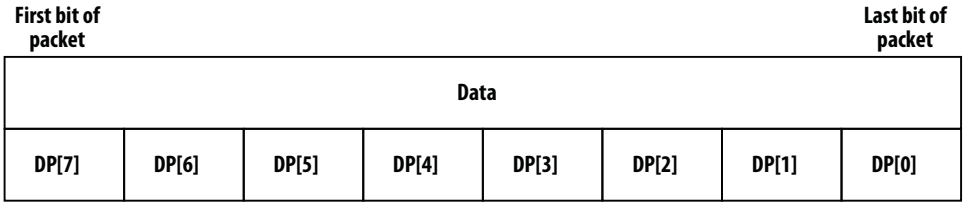

Host Driven Packets

The host initiates all data transmission with a START condition. Next, slave address and register address packets are sent. If there is a device address match, the ADBS-A350 then responds to each Eight-bit data transmission with an acknowledge signal (SDA = 0). Data is transmitted with the most significant bit first.

To terminate the transfer of host driven packets, the host follows the ADBS-A350's ACK with a STOP condition. The host can also issue a START condition after the ADBS-A350's ACK if it wants to start a new data transfer.

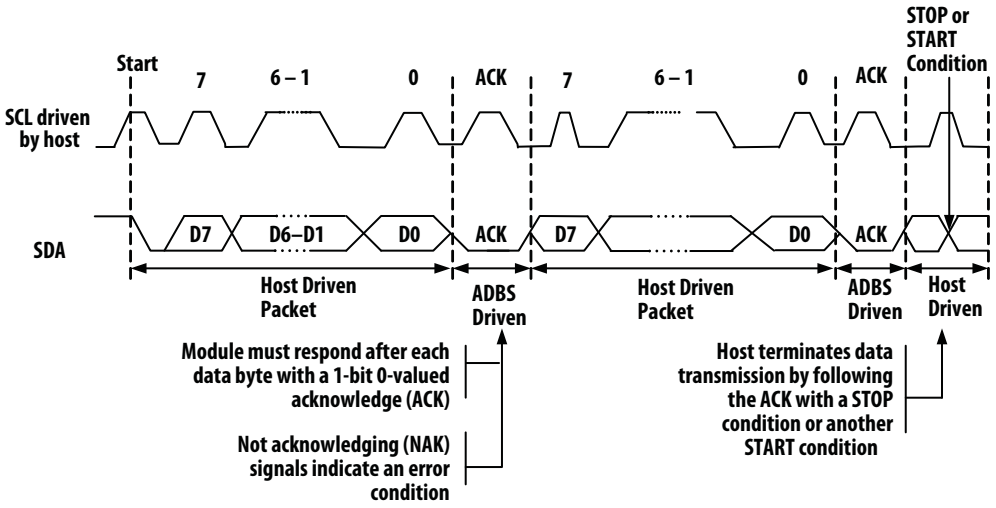

Figure 20. Host packets

ADBS-A350 Driven Packets

By request of the host, the ADBS-A350 acknowledges a read request and then outputs a data byte transmitting the most significant bit (7) first. If the host intends to continue the data transfer, the host acknowledges the ADBS-A350. If the host intends to terminate the transfer, it responds with not acknowledge (SDA = 1), and then drives SDA to generate a STOP condition. The host can also drive a START condition if it wants to begin a new data transfer with the same ADBS-A350.

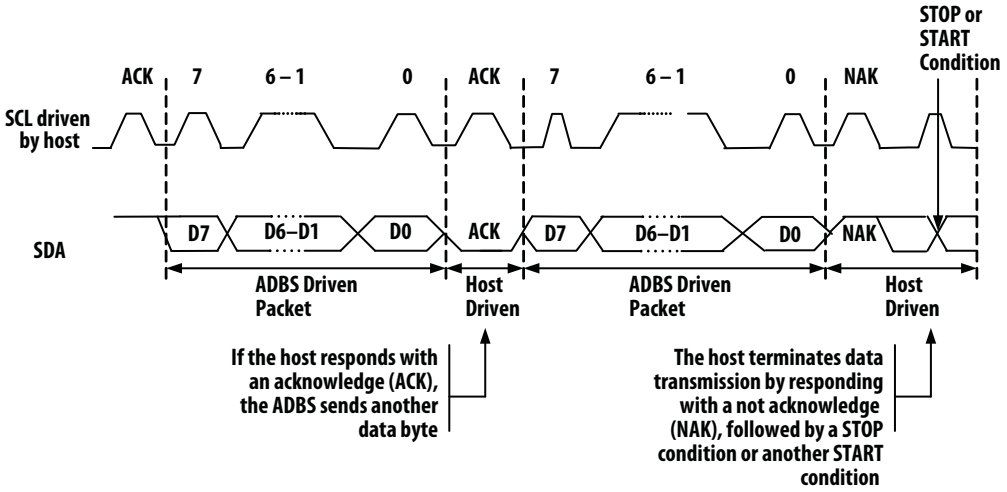

Figure 21. Sensor packets

Example: Writing Data to Sensor Registers

The host writes a value of 0x02 to address 0x07 in the following illustration.

The example ADBS-A350 address is 0x57.

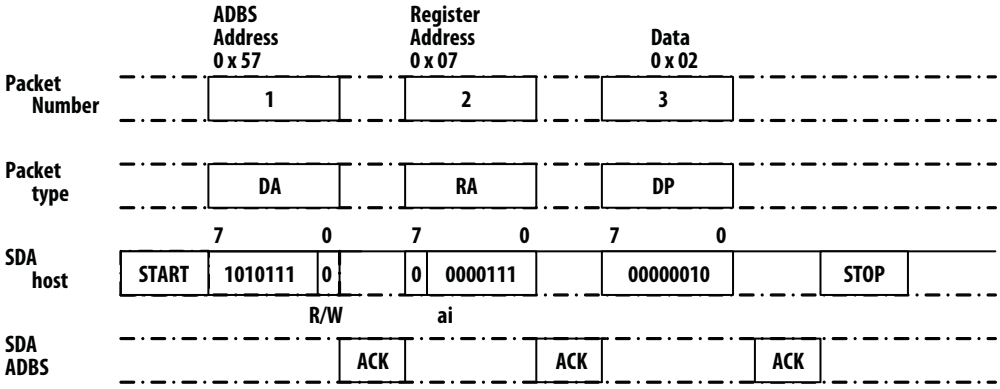

Figure 22. TWI write

Example: Single Byte Read from Sensor Register

The sensor reads a value 0x01from the register address 0x02 in the following illustration. Again, the example ADBS-A350 address is 0x57.

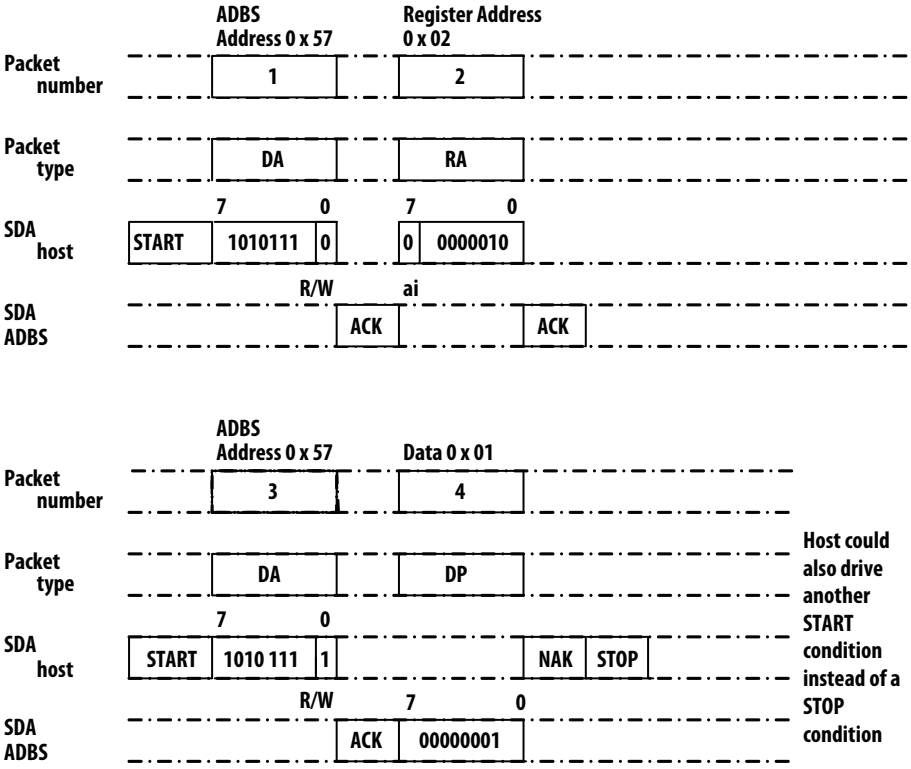

Figure 23. TWI single byte read

Example: Polling of Status register (X-Y Motion Bit and Button bits)

To poll the STATUS register, the following structure can be used:

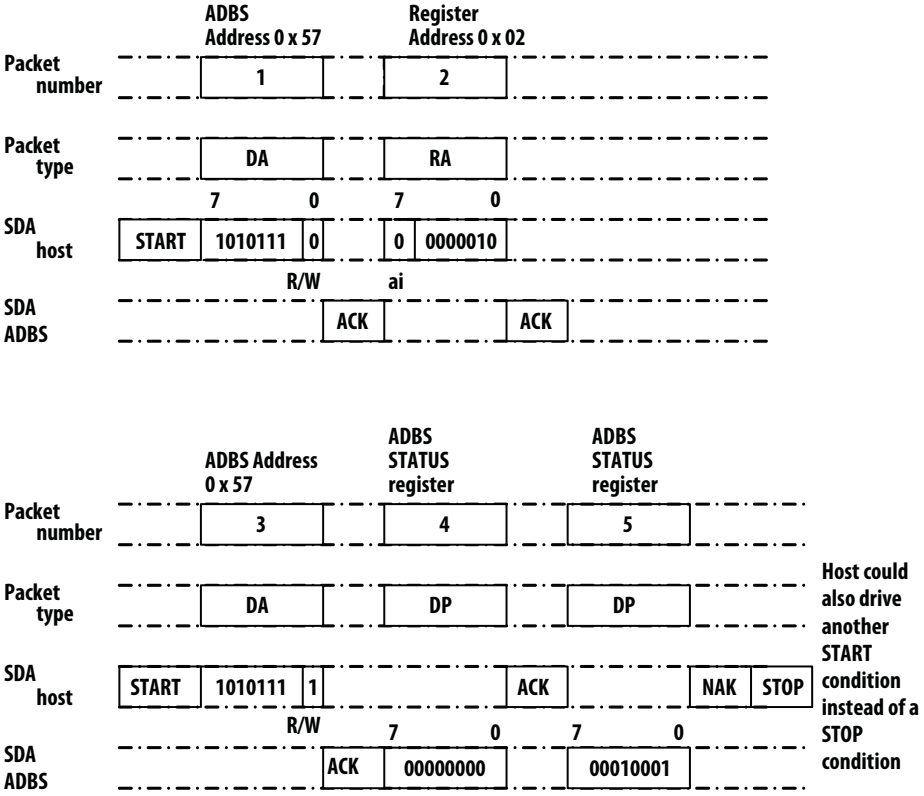

Figure 24. TWI polling

In this case, the host read ADBS-A350 data packets until the update bit (bit 4). Then the host could read successive registers using the ai bit example below.

Note: polling the Status register rather than using the DATA_RDY pin increases power consumption

Example: Multiple-Byte Read from Sensor Register using 'ai' bit

The ai is a useful feature, especially in the case of reading Delta_X, Delta_Y, and Delta_HI in succession once either the DATA_RDY interrupt pin and/or update bit in the STATUS register bit are set.

Once the ai bit is set, the slave will deliver data packets from successive addresses until the 'STOP' condition from the host.

In the example below, 3 bytes are read successively from registers 0x03, 0x04, and 0x05.

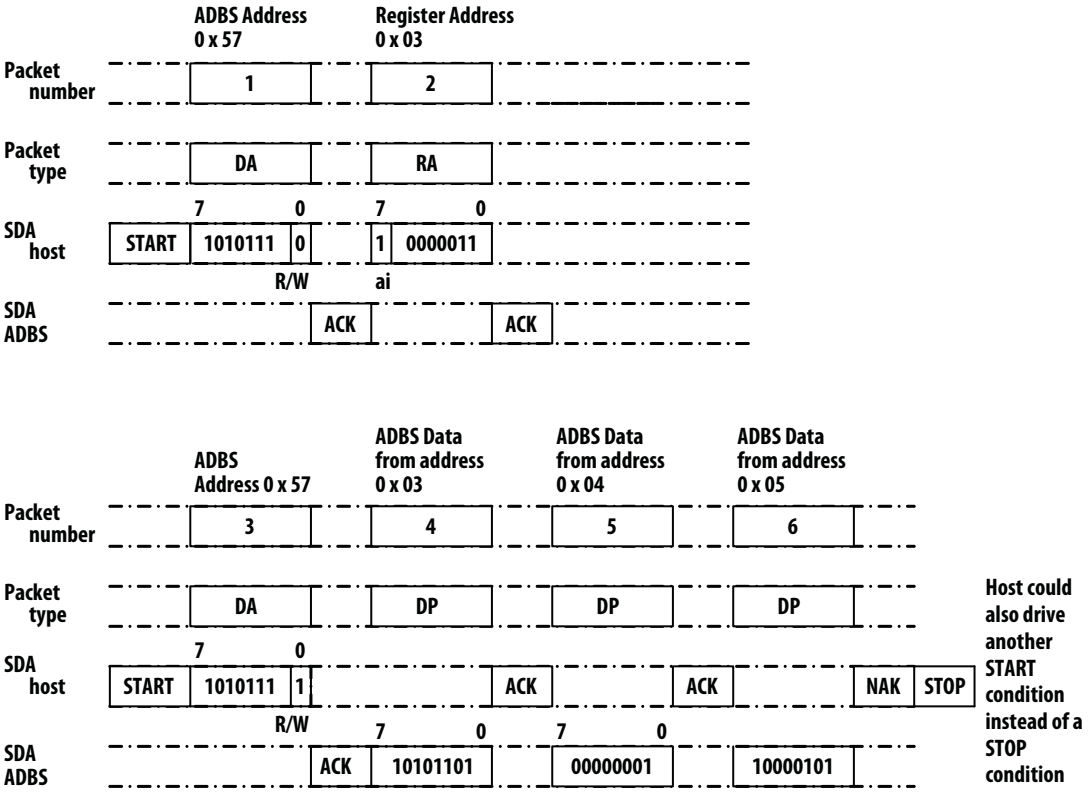

Figure 25. TWI ai bit

SCL and SDA Timing

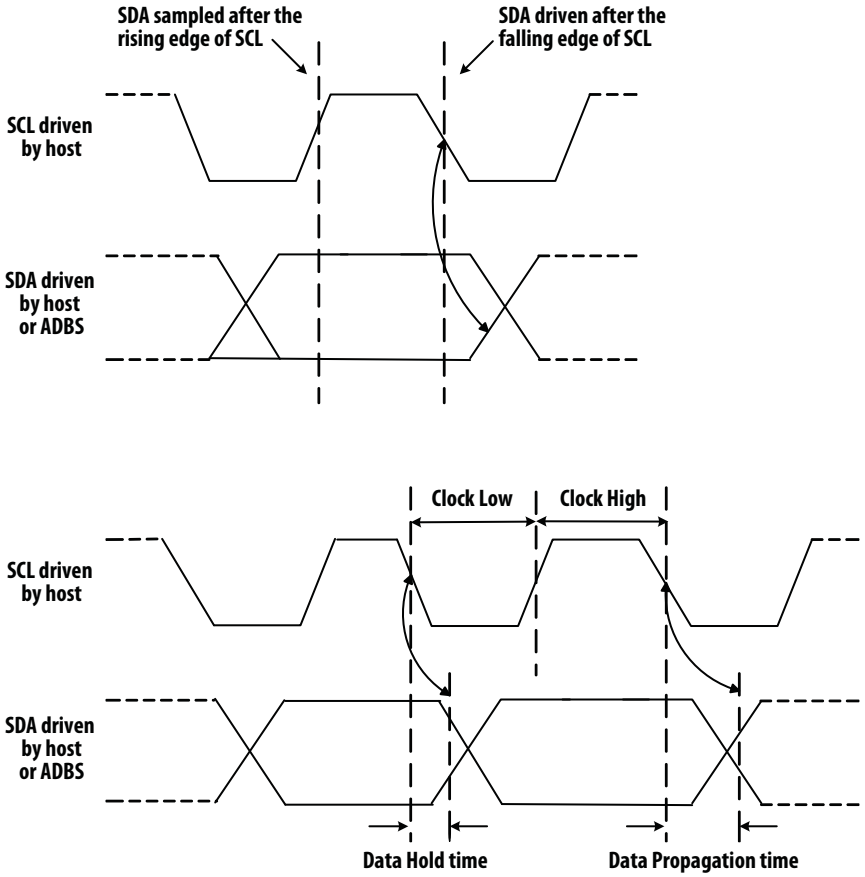

Figure 26. TWI SCL and SDA Timing

ADBS-A350 driven SDA

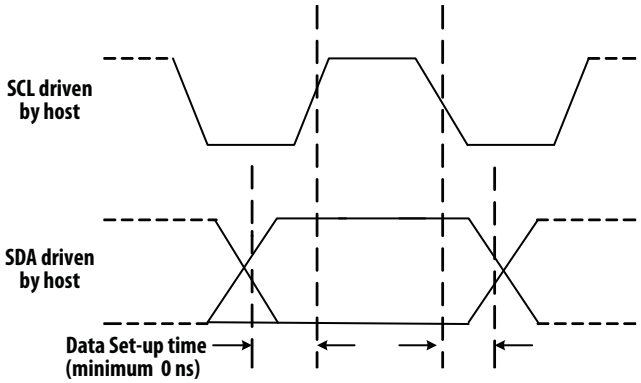

Figure 27. Sensor driven SDA

Registers

The ADBS-A350 registers are accessible via the serial port. The registers are used to read motion data and status as well as to set the device configuration.

Address	Register	Read/ Write	Default Value	Address	Register	Read/ Write	Default Value
0x00	Product_ID	R	0x88	0x40-0x5f	Reserved		
0x01	Revision_ID	R	0x00	0x60	OFN_Engine1	R/W	0x84
0x02	EVENT	R/W	Any	0x61	OFN_Engine2	R/W	0x89
0x03	Delta_X	R	Any	0x62	Resolution	R/W	0x22
0x04	Delta_Y	R	Any	0x63	Speed_Ctrl	R/W	0x0e
0x05	SQUAL	R	Any	0x64	Speed_ST12	R/W	0x08
0x06	Shutter_Upper	R	Any	0x65	Speed_ST21	R/W	0x06
0x07	Shutter_Lower	R	Any	0x66	Speed_ST23	R/W	0x40
0x08	Maximum_Pixel	R	Any	0x67	Speed_ST32	R/W	0x08
0x09	Pixel_Sum	R	Any	0x68	Speed_ST34	R/W	0x48
0x0a	Minimum_Pixel	R	Any	0x69	Speed_ST43	R/W	0x0a
0x0b	Pixel_Grab	R/W	Any	0x6a	Speed_ST45	R/W	0x50
0x0c	CRC0	R	0x00	0x6b	Speed_ST54	R/W	0x48
0x0d	CRC1	R	0x00	0x6c	GPIO_CTRL	R/W	0x80
0x0e	CRC2	R	0x00	0x6d	AD_CTRL	R/W	0xc4
0x0f	CRC3	R	0x00	0x6e	AD_ATH_HIGH	R/W	0x3a
0x10	Self_Test	W	0x00	0x6f	AD_DTH_HIGH	R/W	0x40
0x11	Reserved			0x70	AD_ATH_LOW	R/W	0x35
0x12	BUTTON_STATUS	R/W	0x00	0x71	AD_DTH_LOW	R/W	0x3b
0x13	Run_Downshift	R/W	0x04	0x72	QUANTIZE_CTRL	R/W	0x99
0x14	Rest1_Period	R/W	0x01	0x73	XYQ_THRESH	R/W	0x02
0x15	Rest1_Downshift	R/W	0x1f	0x74	MOTION_CTRL	R/W	0x00
0x16	Rest2_Period	R/W	0x09	0x75	FPD_CTRL	R/W	0xfa
0x17	Rest2_Downshift	R/W	0x2f	0x76	FPD_THRESH	R/W	0x2c
0x18	Rest3_Period	R/W	0x31	0x77	ORIENT_CTRL	R/W	0x00
0x19	Reserved			0x78	FPD_SQUAL_THRESH	R/W	0x40
0x1a	LED_CTRL	R/W	0x00	0x79	FPD_VALUE	R/W	0x00
0x1b	Reserved			0x7a	FPD_STATUS	R	0x20
0x1c	IO_Mode	R/W	0x00	0x7b	SC_CTRL	R/W	0x25
0x1d	EVENT_CTRL	R/W	0x04	0x7c	SC_T_TAPNHOLD	R/W	0x45
0x28	Fast_Video_Dump	R/W	0x00	0x7d	SC_T_DOUBLE	R/W	0x1e
0x2e	Observation	R/W	Any	0x7e	SC_DELTA_THRESH	R/W	0x19
0x31	Pad_Status	R	0x00	0x7f	SC_STATUS	R/W	0x00
0x32	Reserved						
0x33	Pad_Test_Out	RW	0x00				
0x34	Pad_Function	W	0x00				
0x3a	SOFT_RESET	W	0x00				
0x3b	Shutter_Max_Hi	R/W	0x0b				
0x3c	Shutter_Max_Lo	R/W	0x71				
0x3d	Reserved						
0x3e	Inverse_Revision_ID	R	0xFF				
0x3f	Inverse_Product_ID	R	0x77				

Product_ID Address: 0x00
Access: Read Reset Value: 0x88

Bit	7	6	5	4	3	2	1	0
Field	PID_7	PID_6	PID_5	PID_4	PID_3	PID_2	PID_1	PID_0

Data Type: 8-Bit unsigned integer.

USAGE: This register contains a unique identification assigned to the ADBS-A350. The value in this register does not change; it can be used to verify that the serial communications link is functional.

Revision_ID Address: 0x01
Access: Read Reset Value: 0x00

Bit	7	6	5	4	3	2	1	0
Field	RID_7	RID_6	RID_5	RID_4	RID_3	RID_2	RID_1	RID_0

Data Type: 8-Bit unsigned integer.

USAGE: This register contains the IC revision. It is subject to change when new IC versions are released.

EVENT Address: 0x02
Access: Read/Write Reset Value: Any

Bit	7	6	5	4	3	2	1	0
Field	MOT	PIXRDY	PIXFIRST	OVFL	RESET_ST	BUT_CLICK	SOFT_CLICK	FPD

Data Type: Bit field.

USAGE: Event detect register (0x02) allows user to determine if any event interrupts (FPD, Motion, Soft click or Button click) has occurred since the last time it was read. If the MOT bit is set, then the user should read registers 0x03 and 0x04 to get the accumulated motion. Read this register before reading the Delta_Y and Delta_X registers. Writing anything to this register clears the MOT and OVFL bits, Delta_Y and Delta_X registers. The written data byte is not saved.

Internal buffers can accumulate more than eight bits of motion for X or Y. If any of the internal buffers overflow, then absolute path data is lost and the OVFL bit is set. This bit is cleared once some motion has been read from the Delta_X and Delta_Y registers, and if the buffers are not at full scale. Since more data is present in the buffers, the cycle of reading the Event, Delta_X and Delta_Y registers should be repeated until the motion bit (MOT) is cleared. If the Event register has not been read for long time, at 500 cpi it may take up to 16 read cycles to clear the buffers, at 1000 cpi, up to 32 cycles. To clear an overflow, write anything to this register.

The PIXRDY bit will be set whenever a valid pixel data byte is ready and available in the Pixel_Dump register. Check that this bit is set before reading from Pixel_Dump. To ensure that the Pixel_Grab pointer has been reset to pixel 0,0 on the initial write to Pixel_Grab, check to see if PIXFIRST is set to high.

Field Name	**Description**
MOT	Motion since last report **0 = No motion** 1 = Motion occurred, data ready for reading in Delta_X and Delta_Y registers Bit reset when motion data in Delta_X and Delta_Y registers are cleared
PIXRDY	Pixel Dump data byte is available in Pixel_Dump register **0 = data not available** 1 = data available
PIXFIRST	This bit is set when the Pixel_Grab register is written to or when the complete pixel array has been read, initiating an increment to pixel 0,0. **0 = Pixel_Grab data not from pixel 0,0** 1 = Pixel_Grab data is from pixel 0,0
OVF	Motion overflow, ΔY and/or ΔX buffer has overflowed since last report **0 = no overflow** 1 = Overflow has occurred
RESET_ST	Reset status bit. Any internal or external reset will set this bit. Write anything to this register to clear it. 0 = No reset **1 = Reset occurred**
BUT_CLICK	Button click report **0 = No Button click** 1 = Button click occurred Bit clear or reset by reading BUTTON_STATUS (0x12) register
SOFT_CLICK	Soft click report **0 = No Soft click** 1 = Soft click occurred Bit clear or reset by reading SC_STATUS (0x7F) register
FPD	Finger presence detect bit reports a change in finger state (finger on to finger off and vice versa) **0 = No finger state change detected** 1 = Finger state change detected Bit clear or reset by reading FPD_STATUS (0x7A) register

Delta_X			Address: 0x03					
Access: Read			Reset Value: Any					
Bit	7	6	5	4	3	2	1	0
Field	Y_7	Y_6	Y_5	Y_4	Y_3	Y_2	Y_1	Y_0

Data Type: Eight bit 2's complement number.

USAGE: X movement is counts since last report. Absolute value is determined by resolution. Reading clears the register.

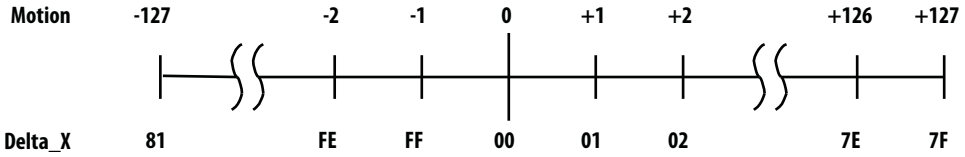

NOTES: Avago RECOMMENDS that registers 0x03 and 0x04 be read sequentially.

Delta_Y			Address: 0x04					
Access: Read			Reset Value: Any					
Bit	7	6	5	4	3	2	1	0
Field	X_7	X_6	X_5	X_4	X_3	X_2	X_1	X_0

Data Type: Eight bit 2's complement number.

USAGE: Y movement is counts since last report. Absolute value is determined by resolution. Reading clears the register.



NOTES: Avago RECOMMENDS that registers 0x03 and 0x04 be read sequentially.

SQUAL			Address: 0x05					
Access: Read			Reset Value: Any					
Bit	7	6	5	4	3	2	1	0
Field	SQ_7	SQ_6	SQ_5	SQ_4	SQ_3	SQ_2	SQ_1	SQ_0

Data Type: Upper 8 bits of a 9-bit unsigned integer.

USAGE: SQUAL (Surface Quality) is a measure of the number of valid features visible by the sensor in the current frame. The maximum SQUAL register value is 167. Since small changes in the current frame can result in changes in SQUAL, variations in SQUAL when looking at a surface are expected.

Shutter_Upper Address: 0x06
Access: Read Reset Value: Any

Bit	7	6	5	4	3	2	1	0
Field	S_{15}	S_{14}	S_{13}	S_{12}	S_{11}	S_{10}	S_9	S_8

Shutter_Lower Address: 0x07
Access: Read Reset Value: Undefined

Bit	7	6	5	4	3	2	1	0
Field	S_7	S_6	S_5	S_4	S_3	S_2	S_1	S_0

Data Type: Sixteen bit unsigned integer.

USAGE: Units are clock cycles. Read Shutter_Upper first, then Shutter_Lower. They should be read consecutively. The shutter is adjusted to keep the average and maximum pixel values within normal operating ranges. The shutter value is automatically adjusted.

Maximum_Pixel Address: 0x08
Access: Read Reset Value: Any

Bit	7	6	5	4	3	2	1	0
Field	MP_7	MP_6	MP_5	MP_4	MP_3	MP_2	MP_1	MP_0

Data Type: Eight-bit number.

USAGE: Maximum Pixel value in current frame. Minimum value = 0, maximum value = 254. The maximum pixel value can vary with every frame.

Pixel_Sum Address: 0x09
Access: Read Reset Value: Any

Bit	7	6	5	4	3	2	1	0
Field	AP_7	AP_6	AP_5	AP_4	AP_3	AP_2	AP_1	AP_0

Data Type: High 8 bits of an unsigned 17-bit integer.

USAGE: This register is used to find the average pixel value. It reports the seven bits of a 16-bit counter, which sums all pixels in the current frame. It may be described as the full sum divided by 512. To find the average pixel value, use the following formula:

Average Pixel = Register Value * 128/121 = Register Value * 1.06

The maximum register value is 240. The minimum is 0. The pixel sum value can change every frame.

Minimum_Pixel Address: 0x0a
Access: Read Reset Value: Any

Bit	7	6	5	4	3	2	1	0
Field	MP_7	MP_6	MP_5	MP_4	MP_3	MP_2	MP_1	MP_0

Data Type: Eight-bit number.

USAGE: Minimum Pixel value in current frame. Minimum value = 0, maximum value = 254. The minimum pixel value can vary with every frame.

Pixel_Grab Address: 0x0b
Access: Read/Write Reset Value: Any

Bit	7	6	5	4	3	2	1	0
Field	PD_7	PD_6	PD_5	PD_4	PD_3	PD_2	PD_1	PD_0

Data Type: Eight-bit word.

USAGE: For test purposes, the sensor will read out the contents of the pixel array, one pixel per frame. To start a pixel grab, write anything to this register to reset the pointer to pixel 0,0. Then read the PIXRDY bit in the Motion register. When the PIXRDY bit is set, there is valid data in this register to read out. After the data in this register is read, the pointer will automatically increment to the next pixel. Reading may continue indefinitely; once a complete frame's worth of pixels has been read, PIXFIRST will be set to high to indicate the start of the first pixel and the address pointer will start at the beginning location again. The pixel map address and corresponding sensor orientation is shown below.

0	1	2	3	4	5	6	7	8	9	10	11	12	13	14	15	16	17	18
19	20	21	22	23	24	25	26	27	28	29	30	31	32	33	34	35	36	37
38	39	40	41	42	43	44	45	46	47	48	49	50	51	52	53	54	55	56
57	58	59	60	61	62	63	64	65	66	67	68	69	70	71	72	73	74	75
76	77	78	79	80	81	82	83	84	85	86	87	88	89	90	91	92	93	94
95	96	97	98	99	100	101	102	103	104	105	106	107	108	109	110	111	112	113
114	115	116	117	118	119	120	121	122	123	124	125	126	127	128	129	130	131	132
133	134	135	136	137	138	139	140	141	142	143	144	145	146	147	148	149	150	151
152	153	154	155	156	157	158	159	160	161	162	163	164	165	166	167	168	169	170
171	172	173	174	175	176	177	178	179	180	181	182	183	184	185	186	187	188	189
190	191	192	193	194	195	196	197	198	199	200	201	202	203	204	205	206	207	208
209	210	211	212	213	214	215	216	217	218	219	220	221	222	223	224	225	226	227
228	229	230	231	232	233	234	235	236	237	238	239	240	241	242	243	244	245	246
247	248	249	250	251	252	253	254	255	256	257	258	259	260	261	262	263	264	265
266	267	268	269	270	271	272	273	274	275	276	277	278	279	280	281	282	283	284
285	286	287	288	289	290	291	292	293	294	295	296	297	298	299	300	301	302	303
304	305	306	307	308	309	310	311	312	313	314	315	316	317	318	319	320	321	322
323	324	325	326	327	328	329	330	331	332	333	334	335	336	337	338	339	340	341
342	343	344	345	346	347	348	349	350	351	352	353	354	355	356	357	358	359	360

Figure 28. Top view of pixel map address without lens

360	359	358	357	356	355	354	353	352	351	350	349	348	347	346	345	344	343	342
341	340	339	338	337	336	335	334	333	332	331	330	329	328	327	326	325	324	323
322	321	320	319	318	317	316	315	314	313	312	311	310	309	308	307	306	305	304
303	302	301	300	299	298	297	296	295	294	293	292	291	290	289	288	287	286	285
284	283	282	281	280	279	278	277	276	275	274	273	272	271	270	269	268	267	266
265	264	263	262	261	260	259	258	257	256	255	254	253	252	251	250	249	248	247
246	245	244	243	242	241	240	239	238	237	236	235	234	233	232	231	230	229	228
227	226	225	224	223	222	221	220	219	218	217	216	215	214	213	212	211	210	209
208	207	206	205	204	203	202	201	200	199	198	197	196	195	194	193	192	191	190
189	188	187	186	185	184	183	182	181	180	179	178	177	176	175	174	173	172	171
170	169	168	167	166	165	164	163	162	161	160	159	158	157	156	155	154	153	152
151	150	149	148	147	146	145	144	143	142	141	140	139	138	137	136	135	134	133
132	131	130	129	128	127	126	125	124	123	122	121	120	119	118	117	116	115	114
113	112	111	110	109	108	107	106	105	104	103	102	101	100	99	98	97	96	95
94	93	92	91	90	89	88	87	86	85	84	83	82	81	80	79	78	77	76
75	74	73	72	71	70	69	68	67	66	65	64	63	62	61	60	59	58	57
56	55	54	53	52	51	50	49	48	47	46	45	44	43	42	41	40	39	38
37	36	35	34	33	32	31	30	29	28	27	26	25	24	23	22	21	20	19
18	17	16	15	14	13	12	11	10	9	8	7	6	5	4	3	2	1	0

Figure 29. Top view of pixel map address with lens

CRC0
Access: Read

Address: 0x0c
Reset Value: 0x00

Bit	7	6	5	4	3	2	1	0
Field	$CRC0_7$	$CRC0_6$	$CRC0_5$	$CRC0_4$	$CRC0_3$	$CRC0_2$	$CRC0_1$	$CRC0_0$

Data Type: Eight-bit number

USAGE: Register 0x0c reports the first byte of the system self test results. See Self Test register 0x10.

CRC1
Access: Read

Address: 0x0d
Reset Value: 0x00

Bit	7	6	5	4	3	2	1	0
Field	$CRC1_7$	$CRC1_6$	$CRC1_5$	$CRC1_4$	$CRC1_3$	$CRC1_2$	$CRC1_1$	$CRC1_0$

Data Type: Eight-bit number

USAGE: Register 0x0d reports the second byte of the system self test results. See Self Test register 0x10.

CRC2
Access: Read

Address: 0x0e
Reset Value: 0x00

Bit	7	6	5	4	3	2	1	0
Field	$CRC2_7$	$CRC2_6$	$CRC2_5$	$CRC2_4$	$CRC2_3$	$CRC2_2$	$CRC2_1$	$CRC2_0$

Data Type: Eight-bit number

USAGE: Register 0x0e reports the third byte of the system self test results. See Self Test register 0x10.

CRC3
Access: Read

Address: 0x0f
Reset Value: 0x00

Bit	7	6	5	4	3	2	1	0
Field	$CRC3_7$	$CRC3_6$	$CRC3_5$	$CRC3_4$	$CRC3_3$	$CRC3_2$	$CRC3_1$	$CRC3_0$

Data Type: Eight-bit number

USAGE: Register 0x0f reports the fourth byte of the system self test results. See Self Test register 0x10.

Self_Test Address: 0x10
Access: Write Reset Value: 0x00

Bit	7	6	5	4	3	2	1	0
Field	Reserved	Reserved	Reserved	Reserved	Reserved	Reserved	Reserved	TESTEN

Data Type: Bit field

USAGE: Set the TESTEN bit in register 0x10 to start the system self-test. The test takes 250ms. During this time, do not write or read through the SPI and I2C ports. Results are available in the CRC0-3 registers.

Field Name	**Description**
TESTEN	Enable System Self Test **0 = Disable** 1 = Enable

The procedure to start self test is as follows:-

1. Perform power up sequence (refer to page 11 of datasheet)
2. Write data 0x5A to register 0x3A to initiate soft reset.
3. Write data 0xC1 to register 0x29.
4. Write data 0x59 to register 0x11
5. Write data 0xFF to register 0x60.
6. Write data 0x88 to register 0x61.
7. Write data 0xAA to register 0x72.
8. Write data 0xC4 to register 0x63
9. Write data 0x20 to register 0x75
10. Write data 0x05 to register 0x76
11. Write data 0x04 to register 0x7C
12. Write data 0xFF to register 0x7E
13. Write data 0x01 to register 0x10 to initiate self test.
14. Wait 250ms.
15. Read CRC0 from address 0x0c, CRC1 from address 0x0d, CRC2 from address 0x0e, CRC3 from address 0x0f.
16. After self test, execute power up sequence again.

The results are as follows.

CRC#	
CRC0	0x3E
CRC1	0x5C
CRC2	0xA4
CRC3	0x24

BUTTON_STATUS Address: 0x12
Access: Read/Write Reset Value: 0x00

Bit	7	6	5	4	3	2	1	0
Field	Assert count	Assert count	Deassert count	Deassert count	Reserved	Reserved	Reserved	But_Status

Data Type: Bit field

USAGE: Register 0x12 allows the user to read button status. Writing any value to this register will restart the counter.

Field Name	Description
Assert count 7:6	Counts for number of times the button state change from 0 to 1
Deassert count 5:4	Counts for number of times the button state change from 1 to 0
But_Status	Button current status

Run_Downshift Address: 0x13
Access: Read/Write Reset Value: 0x04

Bit	7	6	5	4	3	2	1	0
Field	RD_7	RD_6	RD_5	RD_4	RD_3	RD_2	RD_1	RD_0

This register set the Run to Rest 1 downshift time.

Run Downshift time = RD[7:0] x 8 x Run_rate.

Default value: 4 x 8 x 8 ms = 256 ms
Min: 2 x 8 x 8 ms = 128 ms
Max: 242 x 8 x 8 ms = 15,488 ms = 15.49 s

All the above values are calculated base on 25 MHz System clock.

Rest1_Period Address: 0x14
Access: Read/Write Reset Value: 0x01

Bit	7	6	5	4	3	2	1	0
Field	$R1R_7$	$R1R_6$	$R1R_5$	$R1R_4$	$R1R_3$	$R1R_2$	$R1R_1$	$R1R_0$

This register set the Rest 1 frame rate.

Rest1 frame rate = (R1R[7:0] + 1) x 10 ms.

Default value: 2 x 10 ms = 20 ms
Min: 2 x 10 ms = 20 ms
Max: 241 x 10 ms = 2,410 ms = 2.41 s

All the above values are calculated base on 100 Hz Hibernate clock.

Rest1_Downshift Address: 0x15
Access: Read/Write Reset Value: 0x1f

Bit	7	6	5	4	3	2	1	0
Field	$R1D_7$	$R1D_6$	$R1D_5$	$R1D_4$	$R1D_3$	$R1D_2$	$R1D_1$	$R1D_0$

This register set the Rest 1 to Rest 2 downshift time.

Rest1 Downshift time = R1D[7:0] x 16 x Rest1_Rate.

Default value: 31 x 16 x 20 ms (Rest1_Rate default) = 9,920 ms = 9.92 s
Min: 1 x 16 x 20 ms (Rest1_Rate min) = 320 ms
Max: 242 x 16 x 2.56 s (Rest1_Rate max) = 9,912 s = 165 min = 2.75 hr

All the above values are calculated base on 100 Hz Hibernate clock.

Rest2_Period Address: 0x16
Access: Read/Write Reset Value: 0x09

Bit	7	6	5	4	3	2	1	0
Field	$R2R_7$	$R2R_6$	$R2R_5$	$R2R_4$	$R2R_3$	$R2R_2$	$R2R_1$	$R2R_0$

This register set the Rest 2 frame rate.

Rest2 frame rate = (R2R[7:0] + 1) x 10 ms.

Default value: 10 x 10 ms = 100 ms
Min: 2 x 10 ms = 20 ms
Max: 241 x 10 ms = 2,410 ms = 2.41 s

All the above values are calculated base on 100 Hz Hibernate clock.

Rest2_Downshift Address: 0x17
Access: Read/Write Reset Value: 0x2f

Bit	7	6	5	4	3	2	1	0
Field	$R2D_7$	$R2D_6$	$R2D_5$	$R2D_4$	$R2D_3$	$R2D_2$	$R2D_1$	$R2D_0$

This register set the Rest 2 to Rest 3 downshift time.

Rest2 Downshift time = R2D[7:0] x 128 x Rest2_Rate.

Default value: 47 x 128 x 100 ms (Rest2_Rate default) = 601.6 s = 10 min
Min: 1 x 128 x 20 ms (Rest2_Rate min) = 2560 ms = 2.56 s
Max: 242 x 128 x 2.56 s (Resr2_Rate max) = 79,298 s = 1,321 min = 22 hrs

All the above values are calculated base on 100 Hz Hibernate clock.

Rest3_Period Address: 0x18
Access: Read/Write Reset Value: 0x31

Bit	7	6	5	4	3	2	1	0
Field	$R3R_7$	$R3R_6$	$R3R_5$	$R3R_4$	$R3R_3$	$R3R_2$	$R3R_1$	$R3R_0$

This register set the Rest 3 frame rate.

Rest3 frame rate = (R3R[7:0] + 1) x 10 ms.

Default value: 50 x 10 ms = 500 ms
Min: 2 x 10 ms = 20 ms
Max: 241 x 10 ms = 2,410 ms = 2.41 s

All the above values are calculated base on 100 Hz Hibernate clock.

Reserved Address: 0x19

LED_Control Address: 0x1a
Access: Read/Write Reset Value: 0x00

Bit	7	6	5	4	3	2	1	0
Field	Reserved	Reserved	Reserved	Reserved	LED_On	LED2	LED1	LED0

Data Type: Bit field

USAGE: Register 0x1a allows the user to change the LED drive current of the sensor.

Field Name	Description
LED_On	**0 = LED normal operation** 1 = LED always On
LED2:0	**0x00 = 13 mA** 0x02 = 9.6 mA 0x07 = 27 mA

Reserved Address: 0x1b

IO_Mode Address: 0x1c
Access: Read/Write Reset Value: 0x00

Bit	7	6	5	4	3	2	1	0
Field	Reserved	Reserved	Reserved	Burst	Reserved	SPI	Reserved	TWI

Data Type: Bit field

USAGE: Register 0x1c allows the user to read the Input or Output mode of the sensor.

Field Name	Description
Burst	Burst mode **0 = not in burst mode** 1 = In Burst mode
SPI	SPI mode **0 = not in SPI mode** 1 = In SPI mode
TWI	TWI mode **0 = not in TWI mode** 1 = In TWI mode

EVENT_CTRL Address: 0x1d
Access: Read/Write Reset Value: 0x04

Bit	7	6	5	4	3	2	1	0
Field	Event_ Active_Set	Reserved	Reserved	Reserved	SFCL	FPD	BCL	MOT

Data Type: Bit field

USAGE: Register 0x1d allows the user to configure and control the Event_Int output pin. By default, FPD interrupt is disabled while all other interrupts enabled.

Field Name	Description
Event_Active_Set	Event_Int pin setting 0 = Active-low Output 1 = Active-high Output
SFCL	1 = Disable Soft click interrupt **0 = Enable Soft Click interrupt**
FPD	**1 = Disable Finger Presence Detection (FPD) interrupt** 0 = Enable finger presence detection interrupt
BCL	1 = Disable Button click interrupt **0 = Enable Button Click interrupt**
MOT	1 = Disable Motion interrupt **0 = Enable Motion interrupt**

Fast_Video_Dump Address: 0x28
Access: Read/Write Reset Value: 0x00

Bit	7	6	5	4	3	2	1	0
Field	Reserved	Reserved	Reserved	Reserved	Reserved	Reserved	Reserved	FVD

Data Type: Bit field

USAGE: This register is used to enable and initiating Fast Video Dump. See note on Fast Video Dump for more information.

Field Name	Description
FVD	**0: Disable FVD** 1: Enable FVD

Observation Address: 0x2e
Access: Read/Write Reset Value: Any

Bit	7	6	5	4	3	2	1	0
Field	$MODE_1$	$MODE_0$	Reserved	Reserved	Reserved	Reserved	Reserved	Reserved

Data Type: Bit field

USAGE: Register 0x2e provides bits that are set every frame. It can be used during ESD testing to check that the chip is running correctly. Writing anything to this register will clear the bits.

Field Name	Description
$MODE_{1-0}$	Mode Status: Reports which mode the sensor is in. 00 = Run 01 = Rest1 10 = Rest2 11 = Rest3

PAD_STATUS Address: 0x31
Access: Read Reset Value: 0x00

Bit	7	6	5	4	3	2	1	0
Field	$NRST_ST_1$	$NRST_ST_0$	$SHTDWN_ST_1$	$SHTDWN_ST_0$	$GPIO_ST_1$	$GPIO_ST_0$	$IOSEL_ST_1$	$IOSEL_ST_0$

Data Type: Bit field

USAGE: This register is used to read or check on pin status.

Field Name	**Description**
$NRST_ST_{1-0}$	NRST Pin State 0x0 = Unknown 0x1= Low (Invalid as the chip will be in reset state) 0x2 = High (Indicate a floating high) 0x3 = Hi-Z
$SHTDWN_ST_{1-0}$	SHTDWN Pin State 0x0 = Unknown 0x1= Low 0x2 = High (Invalid as chip will be in shutdown state) 0x3 = Hi-Z
$GPIO_ST_{1-0}$	GPIO Pin State 0x0 = Unknown 0x1= Low 0x2 = High 0x3 = Hi-Z
$IOSEL_ST_{1-o}$	IO_SELECT Pin State 0x0 = Unknown 0x1= Low 0x2 = High 0x3 = Hi-Z

Reserved Address: 0x32

PAD_TEST_OUT Address: 0x33
Access: Read/Write Reset Value: 0x00

Bit	7	6	5	4	3	2	1	0
Field	Reserved	Reserved	Reserved	Reserved	EVENT_O	GPIO_O	MOSI_O	MISO_O

Data Type: Bit field

USAGE: This register is used to set the state of the output pin.

Field Name	Description
EVENT_O	Set state for EVENT_INT output pin 0x0: Low 0x1: High
GPIO_O	Set state for GPIO_O output pin 0x0: Low 0x1: High
MOSI_O	Set state for MOSI_O output pin 0x0: Low 0x1: High
MISO_O	Set state for MISO_O output pin 0x0: Low 0x1: High

PAD_FUNCTION Address: 0x34
Access: Write Reset Value: 0x00

Bit	7	6	5	4	3	2	1	0
Field	Reserved	Reserved	Reserved	OUT_ TEST_EN	Reserved	Reserved	Reserved	Reserved

Data Type: Bit field

USAGE: This register is used to enable output pin testing.

Field Name	Description
OUT_TEST_EN	Enable Output Pin Test

SOFT_RESET Address: 0x3a
Access: Write Reset Value: 0x00

Bit	7	6	5	4	3	2	1	0
Field	RST_7	RST_6	RST_5	RST_4	RST_3	RST_2	RST_1	RST_0

Data Type: 8-bit integer

USAGE: Write 0x5A to this register to reset the chip. All settings will revert to default values.

Shutter_Max_Hi Address: 0x3b
Access: Read/Write Reset Value: 0x0b

Bit	7	6	5	4	3	2	1	0
Field	SMH_7	SMH_6	SMH_5	SMH_4	SMH_3	SMH_2	SMH_1	SMH_0

Data Type: 8-Bit integer

USAGE: This value is the upper 8-bit of shutter maximum open time. Shutter value represents pixel array exposure time in multiples of internal clock cycles with maximum value at 2929 decimal.

Shutter_Max_Lo Address: 0x3c
Access: Read/Write Reset Value: 0x71

Bit	7	6	5	4	3	2	1	0
Field	SML_7	SML_6	SML_5	SML_4	SML_3	SML_2	SML_1	SML_0

Data Type: 8-Bit integer

USAGE: This value is the lower 8-bit of shutter maximum open time. Shutter value represents pixel array exposure time in multiples of internal clock cycles.

Reserved Address: 0x3d

Inverse_Revision_ID Address: 0x3e
Access: Read Reset Value: 0xFF

Bit	7	6	5	4	3	2	1	0
Field	$NRID_7$	$NRID_6$	$NRID_5$	$NRID_4$	$NRID_3$	$NRID_2$	$NRID_1$	$NRID_0$

Data Type: Inverse 8-Bit unsigned integer

USAGE: This value is the inverse of the Revision_ID. It can be used to test the SPI port.

Inverse_Product_ID Address: 0x3f
Access: Read Reset Value: 0x77

Bit	7	6	5	4	3	2	1	0
Field	$NPID_7$	$NPID_6$	$NPID_5$	$NPID_4$	$NPID_3$	$NPID_2$	$NPID_1$	$NPID_0$

Data Type: Inverse 8-Bit unsigned integer

USAGE: This value is the inverse of the Product_ID. It can be used to test the SPI port.

Reserved Address: 0x40-0x5f

OFN_Engine1 Address: 0x60
Access: Read/Write Reset Value: 0x84

Bit	7	6	5	4	3	2	1	0
Field	Engine	Speed	Assert/ Deassert	XYQ	Soft_Click	FPD_En	XY_Scale	PWM

Data Type: Bit field

USAGE: This register is used to set several properties of the sensor.

Field Name	Description
Engine	Master control of OFN engine. Need to enable this bit to enable the rest of OFN features and properties 0 = Disable OFN properties **1 = Enable OFN properties**
Speed_En	Speed switching enable/disable bit **0 = Disable speed switching** 1 = Enable speed switching
Assert/ Deassert	Assert/ Deassert mode enable/disable bit **0 = Disable Assert/Deassert** 1 = Enable Assert/Deassert
XY Q	XY quantization enable/disable bit **0 = Disable quantization** 1 = Enable quantization
Soft_Click	Soft click enable/disable bit **0 = Disable soft click** 1 = Enable soft click
FPD_En	Finger presence detection enable/disable bit 0 = Disable finger presence detection **1 = Enable finger presence detection**
XY_Scale	XY scaling factor enable/disable bit **0 = Disable scaling** 1 = Enable scaling
PWM	Pulse Width Modulation function enable/disable bit **0 = Disable PWM** 1 = Enable PWM

OFN_Engine2 Address: 0x61
Access: Read/Write Reset Value: 0x89

Bit	7	6	5	4	3	2	1	0
Field	Reserved	Reserved	FPD_Rest_ Wake1	FPD_Rest_ Wake0	FPD_Mot_ Cut	Reserved	PAD_Chk On	FPD_SQ_EN

Data Type: Bit field

USAGE: This register is used to set several properties of the sensor related to FPD function.

Field Name	**Description**
FPD_Rest_Wake1:0	Wakes up from rest with FPD **0 = FPD rest wake up disabled** 1 = Wake up when finger is present OR motion is detected 2 = Wake up when finger is present AND motion is detected
FPD_Mot_Cut	In FPD enabled mode, cut off motion when finger is not detected and shutter is below preset value. Shutter preset value can configured by SHUT_CUTOFF_THRES in FPD_CTRL (register 0x75). 0 = Disable FPD_Mot_Cut **1 = Enable FPD_Mot_Cut**
PAD_Chk_On	Enable this bit for PAD_STATUS check
FPD_SQ_EN	To improve FPD on low reflectance surface by comparing the instantaneous Squal value with a threshold set in FPD_SQUAL_THRESH (register 0x78). 0 = Disable FPD_SQ_EN 1 = Enable FPD_SQ_EN

Resolution Address: 0x62
Access: Read/Write Reset Value: 0x32

Bit	7	6	5	4	3	2	1	0
Field	$WakeRES_3$	$WakeRES_2$	$WakeRES_1$	$WakeRES_0$	RES_3	RES_2	RES_1	RES_0

Data Type: Bit field

USAGE: This register is used to set several properties of the sensor.

Field Name	**Description**
$WakeRES_{3:0}$	Sets resolution when sensor wakes up from rest modes. Effective only when speed switching is enabled. 0x00 : 125 cpi 0x05 : 1250 cpi 0x01 : 250 cpi **0x02 : 500 cpi** 0x03 : 750 cpi 0x04 : 1000 cpi
$RES_{3:0}$	Sets resolution of sensor. 0x00 : 125 cpi 0x05 : 1250 cpi 0x01 : 250 cpi **0x02 : 500 cpi** 0x03 : 750 cpi 0x04 : 1000 cpi If speed switching is enabled and both LOW_DPI_ON and HIGH_DPI_ON bits in register 0x63 are enabled or set to '1', resolution is automatically switched from 250-500-750-1000-1250. Note: Reading this RES3:0 bit during speed switching mode provides readback of the instantaneous resolution that corresponds to speed detected based on the thresholds set in Speed_STXX. To test the presence of 5 levels switching by reading RES3:0 of this register, first try reducing the Speed_STXX threshold before setting it back to the desired speed threshold. If speed switching is disabled, this register can be set to any of the available settings from 0x0 to 0x5.

Speed_Ctrl Address: 0x63
Access: Read/Write Reset Value: 0x0E

Bit	7	6	5	4	3	2	1	0
Field	SEL_XY	XY_scale2	XY_scale1	XY_scale0	SP_IntVal1	SP_IntVal0	LOW_DPI_ON	HIGH_DPI_ON

Data Type: Bit field

USAGE: This register is used to set several properties of the sensor.

Field Name	Description
Sel_XY	Select X or Y scale **0 = Enable X scale** 1 = Enable Y scale
XY_scale 2:0	Set scaling factor **0 = 0%** 4 = 50% 1 = 12.5% 5 = 62.5% 2 = 25% 6 = 75% 3 = 37.5% 7 = 87.5%
SPIntVal 1:0	Speed switching checking interval 0x00: 4 ms 0x01: 8 ms 0x02: 12 ms **0x03: 16 ms**
LOW_DPI_ON	0=Disable extra low DPI. 1= Enable extra low DPI on top of 3-steps switching. Default 3-step speed switching (low, mid, high).
HIGH_DPI_ON	0=Disable extra high DPI. 1= Enable extra high DPI on top of 3-steps switching. Default 3-step speed switching (low, mid, high).

Speed_ST12 Address: 0x64
Access: Read/Write Reset Value: 0x08

Bit	7	6	5	4	3	2	1	0
Field	ST	ST	ST	ST	ST	ST	ST	ST

Data Type: Bit field

USAGE: This register is used to set several speed switching properties of the sensor.

Field Name	Description
ST 7:0	Sets resolution switching from step 1 to 2. Write in hexadecimal value. Formula (in decimal) = Velocity (inch per second) * 8

Speed_ST21 Address: 0x65
Access: Read/Write Reset Value: 0x06

Bit	7	6	5	4	3	2	1	0
Field	ST	ST	ST	ST	ST	ST	ST	ST

Data Type: Bit field

USAGE: This register is used to set several speed switching properties of the sensor.

Field Name	Description
ST 7:0	Sets resolution switching from step 2 to 1. Write in hexadecimal value. Formula (in decimal) = Velocity (inch per second) * 8

Speed_ST23 Address: 0x66
Access: Read/Write Reset Value: 0x40

Bit	7	6	5	4	3	2	1	0
Field	ST	ST	ST	ST	ST	ST	ST	ST

Data Type: Bit field

USAGE: This register is used to set several speed switching properties of the sensor.

Field Name	Description
ST 7:0	Sets resolution switching from step 2 to 3. Write in hexadecimal value. Formula (in decimal) = Velocity (inch per second) * 8

OFN_Speed_ST32 Address: 0x67
Access: Read/Write Reset Value: 0x08

Bit	7	6	5	4	3	2	1	0
Field	ST	ST	ST	ST	ST	ST	ST	ST

Data Type: Bit field

USAGE: This register is used to set several speed switching properties of the sensor.

Field Name	Description
ST 7:0	Sets resolution switching from step 3 to 2. Write in hexadecimal value. Formula (in decimal) = Velocity (inch per second) * 8

OFN_Speed_ST34 Address: 0x68
Access: Read/Write Reset Value: 0x48

Bit	7	6	5	4	3	2	1	0
Field	ST	ST	ST	ST	ST	ST	ST	ST

Data Type: Bit field

USAGE: This register is used to set several speed switching properties of the sensor.

Field Name	Description
ST 7:0	Sets resolution switching from step 3 to 4. Write in hexadecimal value. Formula (in decimal) = Velocity (inch per second) * 8

Speed_ST43
Access: Read/Write

Address: 0x69
Reset Value: 0x0a

Bit	7	6	5	4	3	2	1	0
Field	ST	ST	ST	ST	ST	ST	ST	ST

Data Type: Bit field

USAGE: This register is used to set several speed switching properties of the sensor.

Field Name	Description
ST 7:0	Sets resolution switching from step 4 to 3. Write in hexadecimal value. Formula (in decimal) = Velocity (inch per second) * 8

Speed_ST45
Access: Read/Write

Address: 0x6a
Reset Value: 0x50

Bit	7	6	5	4	3	2	1	0
Field	ST	ST	ST	ST	ST	ST	ST	ST

Data Type: Bit field

USAGE: This register is used to set several speed switching properties of the sensor.

Field Name	Description
ST 7:0	Sets resolution switching from step 4 to 5. Write in hexadecimal value. Formula (in decimal) = Velocity (inch per second) * 8

Speed_ST54
Access: Read/Write

Address: 0x6b
Reset Value: 0x48

Bit	7	6	5	4	3	2	1	0
Field	ST	ST	ST	ST	ST	ST	ST	ST

Data Type: Bit field

USAGE: This register is used to set several speed switching properties of the sensor.

Field Name	Description
ST 7:0	Sets resolution switching from step 5 to 4. Write in hexadecimal value. Formula (in decimal) = Velocity (inch per second) * 8

GPIO_CTRL Address: 0x6c
Access: Read/Write Reset Value: 0x80

Bit	7	6	5	4	3	2	1	0
Field	GPIO_ Active_Set	Reserved	GPIO_ Mode5	GPIO_ Mode4	PWM_ Thres3	PWM_ Thres2	PWM_Sel1	PWM_Sel0

Data Type: Bit field

USAGE: This register is used to set GPIO and PWM control.

Field Name	**Description**
GPIO_Active_Set	0 = GPIO is active LOW output **1 = GPIO is active HIGH output**
GPIO_Mode5:4	**0 = Output FPD** 1 = Output PWM 2 = Mechanical button input
PWM_Thres3:2	Start PWM only when Delta_X + Delta_Y is greater than threshold in Speed mode (Speed bit below). 0 = delta > 0 1 = delta > 8 2 = delta > 16 3 = delta >24
PWM_Sel1:0	0 = Finger On/Off, light up in 1 sec 1 = Finger On/Off, light up in 2 sec 2 = Finger On/Off, light up in 3 sec 3 = Speed

AD_CTRL Address: 0x6d
Access: Read/Write Reset Value: 0xc4

Bit	7	6	5	4	3	2	1	0
Field	1	1	Reserved	Reserved	ST_HIGH_3	ST_HIGH_2	ST_HIGH_1	ST_HIGH_0

Data Type: Bit field

USAGE: This register is used to control Assert De-assert. Must write 1to bit 7 and 6.

Field Name	**Description**
$ST_HIGH_{3:0}$	High speed definition. Any steps equal to or above this setting will use high speed A/D threshold.

AD_ATH_HIGH Address: 0x6e
Access: Read/Write Reset Value: 0x3a

Bit	7	6	5	4	3	2	1	0
Field	ATH_H	ATH_H	ATH_H	ATH_H	ATH_H	ATH_H	ATH_H	ATH_H

Data Type: Bit field

USAGE: This register is used to set HIGH speed Assert shutter threshold.

Field Name	Description
ATH_H 7:0	Sets HIGH speed assert threshold. Write in hexadecimal value. Formula (in decimal) = Shutter value / 8. It is recommended to have hysteresis of 60 to 100 between assert and de-assert threshold.

AD_DTH_HIGH Address: 0x6f
Access: Read/Write Reset Value: 0x40

Bit	7	6	5	4	3	2	1	0
Field	DTH_H	DTH_H	DTH_H	DTH_H	DTH_H	DTH_H	DTH_H	DTH_H

Data Type: Bit field

USAGE: This register is used to set HIGH speed De-assert shutter threshold.

Field Name	Description
DTH_H 7:0	Sets HIGH speed de-assert threshold. Write in hexadecimal value. Formula (in decimal) = Shutter value / 8. It is recommended to have hysteresis of 60 to 100 between assert and de-assert threshold.

AD_ATH_LOW Address: 0x70
Access: Read/Write Reset Value: 0x35

Bit	7	6	5	4	3	2	1	0
Field	ATH_L	ATH_L	ATH_L	ATH_L	ATH_L	ATH_L	ATH_L	ATH_L

Data Type: Bit field

USAGE: This register is used to set LOW speed Assert shutter threshold.

Field Name	Description
ATH_L 7:0	Sets LOW speed assert threshold. Write in hexadecimal value. Formula (in decimal) = Shutter value / 8. It is recommended to have hysteresis of 60 to 100 between assert and de-assert threshold.

AD_DTH_LOW Address: 0x71
Access: Read/Write Reset Value: 0x3b

Bit	7	6	5	4	3	2	1	0
Field	DTH_L	DTH_L	DTH_L	DTH_L	DTH_L	DTH_L	DTH_L	DTH_L

Data Type: Bit field

USAGE: This register is used to set LOW speed De-assert shutter threshold.

Field Name	Description
DTH_L 7:0	Sets LOW speed de-assert threshold. Write in hexadecimal value. Formula (in decimal) = Shutter value / 8. It is recommended to have hysteresis of 60 to 100 between assert and de-assert threshold.

QUANTIZE_CTRL Address: 0x72
Access: Read/Write Reset Value: 0x99

Bit	7	6	5	4	3	2	1	0
Field	YQ_ON	YQ_DIV_6	YQ_DIV_5	YQ_DIV_4	XQ_ON	XQ_DIV_2	XQ_DIV_1	XQ_DIV_0

Data Type: Bit field

USAGE: This register is used to set quatization for Delta_X and Delta_Y. If both X and Y quantization modes are on, then only largest quantized X or Y will be reported.

Field Name	Description
YQ_ON	0 = Y quantization off 1 = Y quantization On
$YQ_DIV_{6:4}$	Quantization factor 2^{YQ_DIV} . Reported YQ = DY / 2^{YQ_DIV} .
XQ_ON	0 = X quantization off 1 = X quantization On
$XQ_DIV_{2:0}$	Quantization factor 2^{XQ_DIV} . Reported XQ = DX / 2^{XQ_DIV} .

XYQ_THRESH Address: 0x73
Access: Read/Write Reset Value: 0x02

Bit	7	6	5	4	3	2	1	0
Field	Reserved	Reserved	Reserved	Reserved	Reserved	XYQ_M	XYQ_C_1	XYQ_C_0

Data Type: Bit field

USAGE: This register is used to set quatization gradient for DeltaX and DeltaY.

Field Name	Description
XYQ_M	Gradient of linear region 0 = Gradient 1 1 = Gradient 2
$XYQ_C_{1:0}$	Indicates the offset of linear region (max of C = 3 or 0x03)

MOTION_CTRL Address: 0x74
Access: Read/Write Reset Value: 0x00

Bit	7	6	5	4	3	2	1	0
Field	Reserved	Reserved	Reserved	Reserved	Reserved	Motion_ Int_Thres2	Motion_ Int_Thres1	Motion_ Int_Thres0

Data Type: Bit field

USAGE: This register is used to control Motion interrupt.

Field Name	Description
Motion_Int_ Thres2:0	Motion interrupt threshold Only trigger Motion Interrupt if Delta_X + Delta_Y > Threshold

FPD_CTRL Address: 0x75
Access: Read/Write Reset Value: 0xfa

Bit	7	6	5	4	3	2	1	0
Field	Shut_Cut _Thres7	Shut_Cut _Thres6	Shut_Cut _Thres5	Shut_Cut _Thres4	FPD_On_ Hyst3	FPD_On_ Hyst2	FPD_Off_ Hyst1	FPD_Off_ Hyst0

Data Type: Bit field

USAGE: This register is used to set sensor FPD control.

Field Name	Description
Shut_Cut_Thres7:4	Motion is cut off when shutter value is less than threshold. Valid only when FPD_Mot_Cutoff is enabled. Units are multiple of 256.
FPD_On_Hyst3:2	Hysteresis counter for finger on
FPD_Off_Hyst1:0	Hysteresis counter for finger off

FPD_THRESH Address: 0x76
Access: Read/Write Reset Value: 0x1c

Bit	7	6	5	4	3	2	1	0
Field	FPD_T	FPD_T	FPD_T	FPD_T	FPD_T	FPD_T	FPD_T	FPD_T

Data Type: Bit field

USAGE: This register is used to set the sensitivity of FPD. See OFN A350 Firmware Guide for more information on FPD operation and thresholds setting.

Field Name	Description
FPD_T 7:0	Threshold to compare with FPD Value

ORIENT_CTRL Address: 0x77
Access: Read/Write Reset Value: 0x00

Bit	7	6	5	4	3	2	1	0
Field	XY_SWAP	Y_INV	X_INV	Reserved	Reserved	Reserved	Reserved	Reserved

Data Type: Bit field

USAGE: This register is used to configure Delta_X and Delta_Y reporting direction with respect to sensor orientation

Field Name	Description
XY_SWAP	**0 = Normal sensor reporting of Delta_X, Delta_Y. (default)** 1 = Swap data of Delta_X to Delta_Y and Delta_Y to Delta_X.
Y_INV	**0 = Normal sensor reporting of Delta_Y. (default)** 1 = Invert data of Delta_Y only.
X_INV	**0 = Normal sensor reporting of Delta_X. (default)** 1 = Invert data of Delta_X only.

FPD_SQUAL_THRESH Address: 0x78
Access: Read/Write Reset Value: 0x40

Bit	7	6	5	4	3	2	1	0
Field	FPD_S_T	FPD_S_T	FPD_S_T	FPD_S_T	FPD_S_T	FPD_S_T	FPD_S_T	FPD_S_T

Data Type: Bit field

USAGE: This register is to set the FPD Squal Threshold. It is used when bit 0 (FPD_SQ_EN bit) of OFN_Engine2 (0x61) is enabled for low reflectance surface navigation.

Field Name	Description
FPD_S_T	Squal FPD Threshold to compare with Squal values

FPD_VALUE Address: 0x79
Access: Read/Write Reset Value: 0x00

Bit	7	6	5	4	3	2	1	0
Field	SC_Dou	SC_Dou	SC_Dou	SC_Dou	SC_Dou	SC_Dou	SC_Dou	SC_Dou

Data Type: Bit field

USAGE: This register stores the FPD value that indicates surface reflectivity. Higher FPD value means higher finger or surface reflectivity.

Field Name	Description
FPD_VALUE 7:0	FPD Value

FPD_STATUS Address: 0x7a
Access: Read Reset Value: 0x00

Bit	7	6	5	4	3	2	1	0
Field	FPD_Hyst7	FPD_Hyst6	FPD_Hyst5	FPD_Hyst4	FPD_SQ_ Hyst3	FPD_SQ_ Hyst2	FPD_SQ_ Hyst1	FPD_On

Data Type: Bit field

USAGE: This register is used to confirm FPD flag and to set FPD hysteresis threshold.

Field Name	Description
FPD_Hyst7:4	FPD hysteresis threshold boundary. Actual FPD Hysteresis Threshold = 8 x [FPD_Hyst7:4]
FPD_SQ_Hyst3:1	FPD Squal hysteresis threshold boundary. Actual FPD SQ Hysteresis Threshold = 4 x [FPD_SQ_Hyst3:1]
FPD_On	0 = finger is not present 1 = finger is present

SC_CTRL Address: 0x7b
Access: Read/Write Reset Value: 0x25

Bit	7	6	5	4	3	2	1	0
Field	Reserved	TIM_Res_ Th6	TIM_Res_ Th5	TIM_Res_ Th4	Reserved	Tap+N_ Hold_En	Double_ Click_En	Single_ Click_En

Data Type: Bit field

USAGE: This register is used to set sensor soft click.

Field Name	Description
TIM_Res_Th6:4	Tap and Hold timer reset threshold
Tap_N_Hold_En	0 = Disable Tap and Hold 1 = Enable Tap and Hold
Double_Click_En	0 = Disable Double Click 1 = Enable Double Click
Single_Click_En	0 = Disable Single Click 1 = Enable Single Click

SC_T_TAPNHOLD Address: 0x7c
Access: Read/Write Reset Value: 0x45

Bit	7	6	5	4	3	2	1	0
Field	SC_Dou	SC_Dou	SC_Dou	SC_Dou	SC_Dou	SC_Dou	SC_Dou	SC_Dou

Data Type: Bit field

USAGE: This register is used to set the minimum time before Tap N Hold is triggered.

Field Name	Description
SC_Dou 7:0	Sets waiting time to activate Tap and Hold

SC_T_DOUBLE Address: 0x7d
Access: Read/Write Reset Value: 0x1e

Bit	7	6	5	4	3	2	1	0
Field	SC_Dou	SC_Dou	SC_Dou	SC_Dou	SC_Dou	SC_Dou	SC_Dou	SC_Dou

Data Type: Bit field

USAGE: This register is used to set time between first click and second click to trigger double click. Any second successive click within this time will be considered a double click.

Field Name	Description
SC_Dou 7:0	Sets waiting time after single click for double click to happen

SC_DELTA_THRESH Address: 0x7e
Access: Read/Write Reset Value: 0x19

Bit	7	6	5	4	3	2	1	0
Field	SC_Delta	SC_Delta	SC_Delta	SC_Delta	SC_Delta	SC_Delta	SC_Delta	SC_Delta

Data Type: Bit field

USAGE: This register is used to set sensor single click threshold.

Field Name	Description
SC_Delta 7:0	Threshold to validate single click. Single click is only valid if motion delta sum (Delta_X + Delta_Y) is less than threshold. Units are in 500 cpi.

SC_STATUS Address: 0x7f
Access: Read/Write Reset Value: 0x00

Bit	7	6	5	4	3	2	1	0
Field	Reserved	Reserved	Reserved	Reserved	Reserved	Tap+N_ Hold	Double_ Click	Single_ Click

Data Type: Bit field

USAGE: This register is used to confirm which soft click has been triggered when there is a soft click interrupt being triggered.

Field Name	Description
Tap_N_Hold	0 = Tap and Hold not detected 1 = Tap and Hold detected
Double_Click	0 = Double click not detected 1 = Double click detected
Single_Click	0 = Single click not detected 1 = Single click detected

Packing information

Packaging tape, reel and packing information.

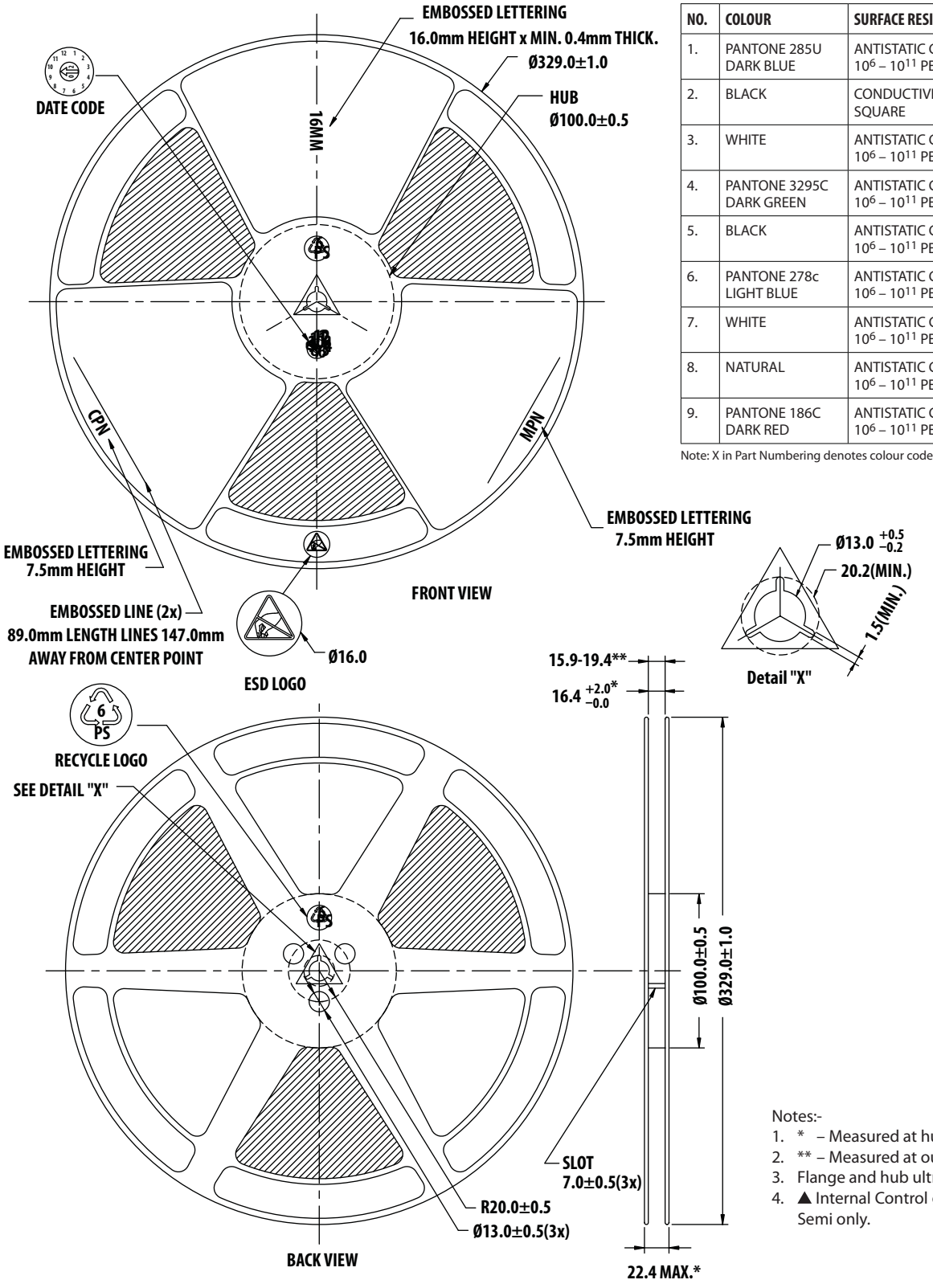

NO.	COLOUR	SURFACE RESISTIVITY
1.	PANTONE 285U DARK BLUE	ANTISTATIC COATED 10^6 – 10^{11} PER OHMS SQUARE
2.	BLACK	CONDUCTIVE <10^6 PER OHMS SQUARE
3.	WHITE	ANTISTATIC COATED 10^6 – 10^{11} PER OHMS SQUARE
4.	PANTONE 3295C DARK GREEN	ANTISTATIC COATED 10^6 – 10^{11} PER OHMS SQUARE
5.	BLACK	ANTISTATIC COATED 10^6 – 10^{11} PER OHMS SQUARE
6.	PANTONE 278c LIGHT BLUE	ANTISTATIC COATED 10^6 – 10^{11} PER OHMS SQUARE
7.	WHITE	ANTISTATIC COATED 10^6 – 10^{11} PER OHMS SQUARE
8.	NATURAL	ANTISTATIC COATED 10^6 – 10^{11} PER OHMS SQUARE
9.	PANTONE 186C DARK RED	ANTISTATIC COATED 10^6 – 10^{11} PER OHMS SQUARE

Note: X in Part Numbering denotes colour code.

Notes:-
1. * – Measured at hub area.
2. ** – Measured at outer edge.
3. Flange and hub ultrasonic welded.
4. ▲ Internal Control ø13.0±0.2 for ON Semi only.

Reel information

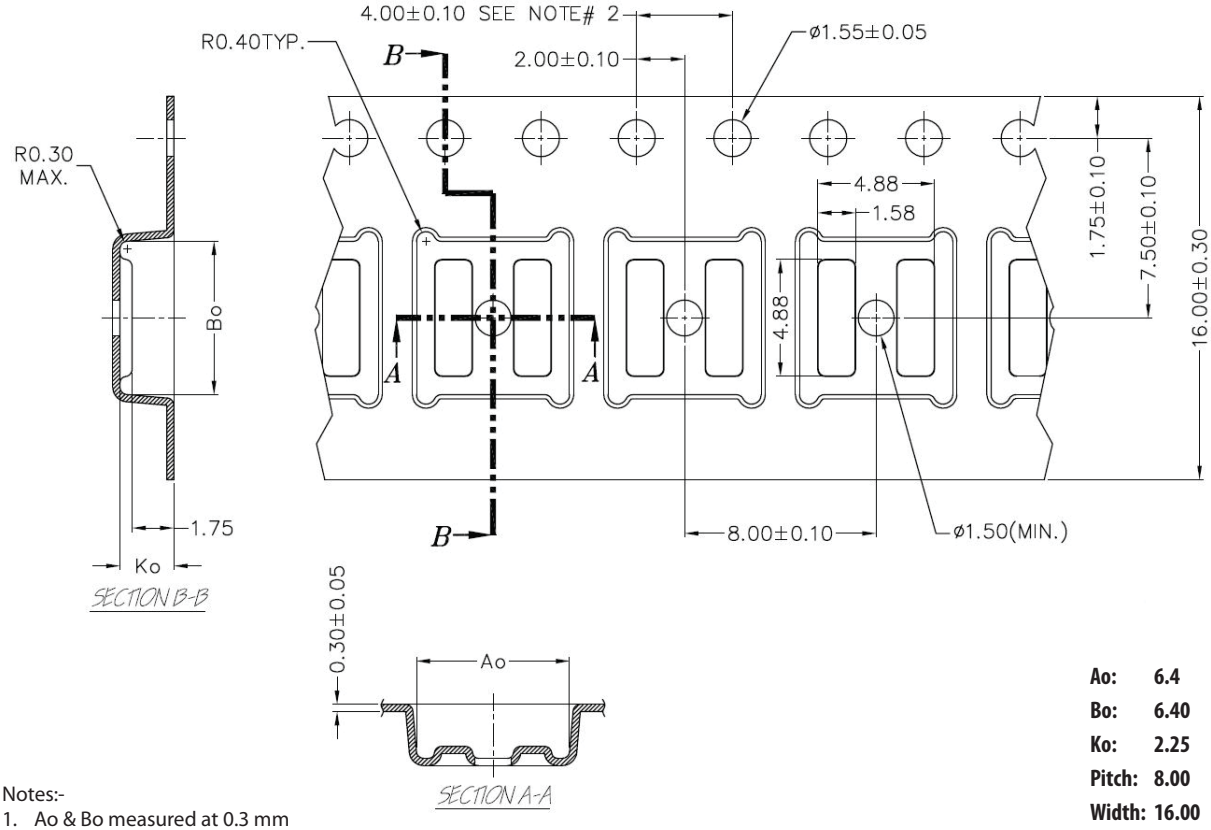

Ao:	**6.4**
Bo:	**6.40**
Ko:	**2.25**
Pitch:	**8.00**
Width:	**16.00**

Notes:-
1. Ao & Bo measured at 0.3 mm above base of pocket.
2. 10 pitches cumulative tol. ±0.2 mm.
3. ( ) Reference dimensions only.

For product information and a complete list of distributors, please go to our web site: **www.avagotech.com**

Avago, Avago Technologies, and the A logo are trademarks of Avago Technologies in the United States and other countries.
Data subject to change. Copyright © 2005-2012 Avago Technologies. All rights reserved.
AV02-2806EN - April 27, 2012